EASYCLOSETS®

Installation Instructions

Watch helpful videos at **EasyClosets.com/Installation**

HOW TO READ THESE INSTRUCTIONS

SECTION 1. GETTING STARTED:

This section helps you identify the installation method your particular design requires, what basic tools are required and which are helpful, the hardware included with your order, and instructs how to quickly inventory your shipment to speed installation.

SECTION 2. BASIC INSTALLATION INSTRUCTIONS:

This section outlines the basic unit framework of vertical panels and cam shelves.

SECTION 3. INSTALLING CUSTOM COMPONENTS:

This section provides detailed instructions for installing custom components, such as hampers, doors, slanted shoe shelves, etc.

SECTION 4. NON-STANDARD INSTALLATIONS:

This section provides detailed instructions for installing your organization system in unconventional situations.

SECTION 5. FINAL STEPS:

This section covers installation of adjustable shelves, rods and other finishing steps.

HOW TO READ YOUR WALL PLANS

HOW TO READ YOUR WALL PLANS:

We've included plans of all the organization systems you ordered. You'll find one elevation drawing for each wall of each organization system in your order.

NOTE: Each Vertical Panel is 3/4" thick. This measurement is not included in the "Width" dimension.

SAMPLE WALL PLAN:

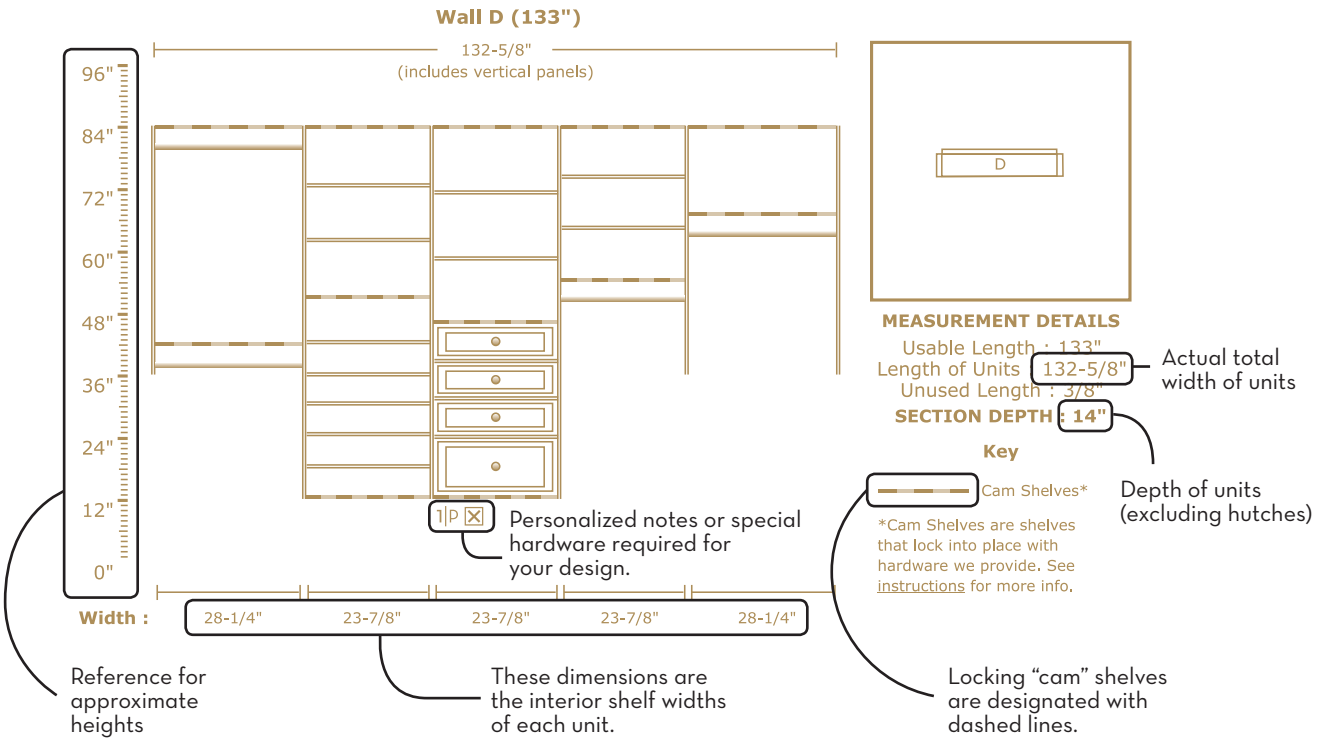

SECTION GUIDE

Thank you for your purchase! It is our desire to make your entire experience from purchase to installation as easy as possible. Please read each step of this installation manual thoroughly to ensure proper installation of your new organization system. Our lifetime limited warranty is based on following proper installation techniques. Installing your organization system in any manner other than the steps outlined in this manual may lead to structural failure of your organization system.*

NOTE: Always install the rail cover after your installation is complete. Hanging your organization system directly on top of the rail cover will cause the material to fail and your organization system to fall.

These instructions are for informational purposes only. Your wall, any hidden wiring or plumbing, and overall work conditions may not be the same as those shown in the illustrations. It is your responsibility to ensure proper installation and, if in doubt, contact customer service. While our products are designed for homeowner installation, you assume all risk associated with the installation process.

*For complete warranty details, see EasyClosets.com.

IMPORTANT HEALTH NOTICE.

Some of the building materials used in this home (or these building materials) emit formaldehyde. Eye, nose, and throat irritation, headache, nausea and a variety of asthma-like symptoms, including shortness of breath, have been reported as a result of formaldehyde exposure. Elderly persons and young children, as well as anyone with a history of asthma, allergies, or lung problems, may be at greater risk. Research is continuing on the possible long-term effects of exposure to formaldehyde.

Reduced ventilation may allow formaldehyde and other contaminants to accumulate in the indoor air. High indoor temperatures and humidity raise formaldehyde levels. When a home is to be located in areas subject to extreme summer temperatures, an air-conditioning system can be used to control indoor temperature levels. Other means of controlled mechanical ventilation can be used to reduce levels of formaldehyde and other indoor air contaminants.

If you have any questions regarding the health effects of formaldehyde, consult your doctor or local health department.

1. GETTING STARTED

a. Required & Recommended Tools 4
b. Basic Steps 5
c. Inventory Your Shipment 6

2. BASIC INSTALLATION INSTRUCTIONS

a. Install Rail for Reach-In Space 7
b. Install Rail for Walk-In Space 9
c. Hang Verticals for Wall Mounted 12
d. Hang Verticals for Floor Mounted 13
e. Cam Shelves 14
f. Vertical Panel Worksheet 17
g. Install Toe Kicks 18
h. Install Cleats 19
i. Installing L-Brackets 20
j. Floor Mounted without Rail 21

3. INSTALLING CUSTOM COMPONENTS

a. Islands and Floor-Based Designs without Rail 22-24
b. Installing Tops 25
c. Full Extension Glides 26
d. Install Drawers and Adjusting Drawers 27
e. Soft Close Glides 28
f. Install Drawers and Adjusting Drawers 29
g. Drawer Lock 30
h. Basket 31
i. Hamper 32-33
j. Shoe Shelf 34
k. Ironing Board 35-36
l. Connecting and Corner Shelf 37-39
m. Door 40
n. Crown Molding 41
o. Pantry Items 42-43

4. NON-STANDARD INSTALLATIONS

a. Pocket Door 44
b. Sloped Ceilings 45
c. Surrounding Wall 46
d. Two Tier Bench System 47

5. FINAL STEPS

a. Rail Cover 48
b. Rods 48
c. Accessories 49
d. Stabilize with L-Brackets 50
e. Care and Use 50
f. File Frame Installation 51

REQUIRED AND RECOMMENDED TOOLS

REQUIRED ITEMS:

Tape Measure

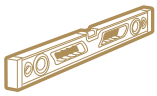
Level

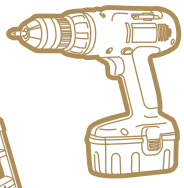
Drill/Driver

Square

Stud Finder

3/8" Drill Bit

Mallet

#2 Phillips Screwdriver

Step Ladder

Hacksaw
(28-32 teeth per inch)

RECOMMENDED TOOLS (MAY BE HELPFUL FOR SOME INSTALLATIONS):

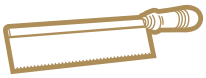
Dovetail Saw

Hand Saw

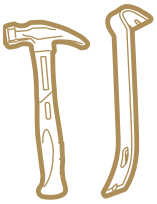
Hammer / Pry Bar

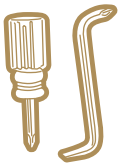
Stubby/Offset #2
Phillips Screwdriver

Jig Saw

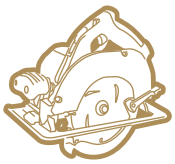
Circular Saw

HARDWARE INCLUDED PER YOUR ORDER:

⚠ WARNING:
CHOKING HAZARD-Small parts.
Not for children under 3 yrs.

This unit contains small parts which could be a choking hazard for small children. Children should be under adult supervision at all times or serious injury could occur.

2" Rail Screw
210199/210208

Single Cam Screw
210353

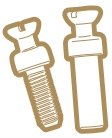
Double Cam Screw
210196/210206

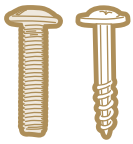
Drawer Face Screws
210213

Cam Fitting

Black	210214	210215
Cherry	210272/552	210273/527
Candlelight	210270	210271/526
Ivory	210276/504	210277/543
Maple	210274/553	210275/522
Brown	210194	210204
White	210278	210279

1-1/4" Toe KickScrew
210198

(#6) 5/8" Screw
210200/210209

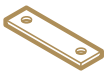
Connector
Mending Bracket
210210

L-Bracket
210219

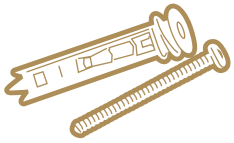
Toggle
210192/210193

1" Pin
3005

H-Channel
2602/2603/2604

Hinge
210212

Shelf Pin
210197/210207

Shoe Shelf Pin
210435

Euro Screw
210201/517/210203

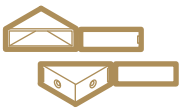
Corner Bracket
2600/2601/2606

2-3/4" Masonry & Drill
Bit Screw
210189/210190

1" Toe KickScrew
210202/518

THREE BASIC STEPS TO ASSEMBLING YOUR SYSTEM

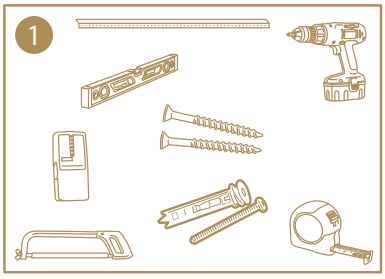

1. ANCHOR STEEL RAIL TO WALL: The key to installing your organizer is a well-anchored, level steel rail. Take your time to get this step right, and the rest of the installation will proceed quickly and smoothly.

NOTE: Since steel rail length is frequently determined by wood stud locations, you must cut the rail with a hack saw. This is usually the only cutting that is required.

If you discover steel studs or masonry walls, please call for proper fasteners. Our sturdy systems are designed to support up to 1,200 lbs. per 8 foot section when properly designed and installed. Please follow the rail installation instructions carefully.

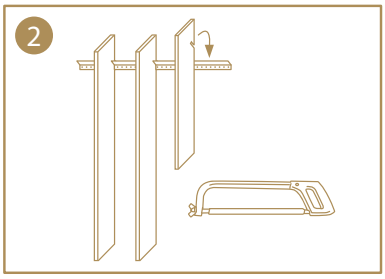

2. HANG VERTICAL PANELS ON STEEL RAIL: Vertical panels are notched on the rear edge near the top to mate with the angled steel rail. Simply hang the vertical panels on the steel rail in their approximate final locations based on your design.

NOTE: The vertical panels must be hung directly on the steel rail. Rail cover is provided to conceal any exposed rail AFTER the organizer has been completely assembled.

Occasionally, a vertical panel will be positioned where a rail screw is located. In this case, use a 3/8" drill bit to remove a small amount from the vertical panel so it fits over the screw head.

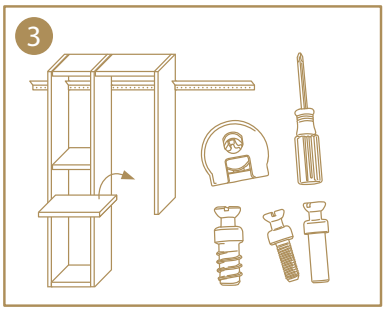

3. CONNECT VERTICAL PANELS AND CAM SHELVES WITH CAM LOCKS AND CAM SCREWS: Cam shelves are semi-permanent. They connect vertical panels and lock in place with cam and bolt hardware. This creates a rigid unit frame in which to install adjustable shelves, hanging rods and numerous other components.

OTHER INSTALLATIONS

Besides wall-mounted units, some designs will have units which rest on the floor:

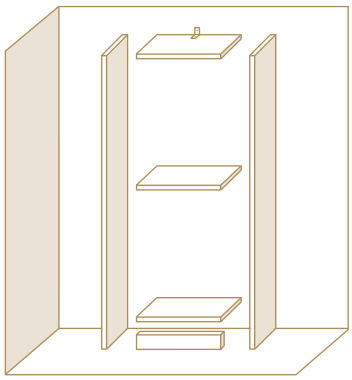

Tall, floor-based units are held to the wall by the L-brackets.

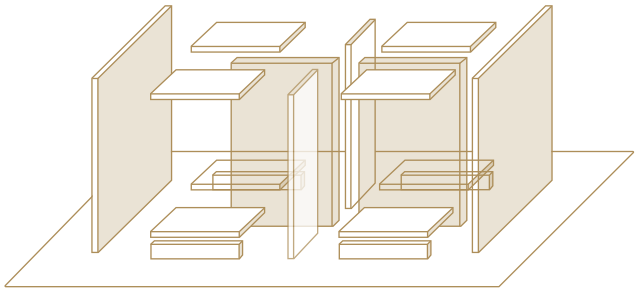

Islands are free standing.

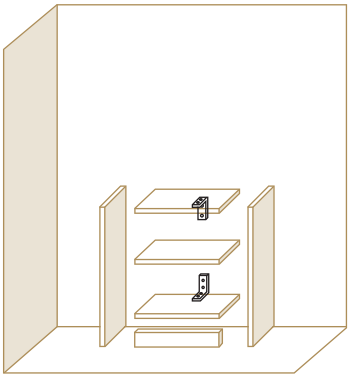

Short floor-based units are anchored to the wall with L-brackets.

INVENTORY YOUR SHIPMENT & REMOVE OLD STORAGE MATERIAL PRIOR TO INSTALLATION!

CHECK YOUR INVENTORY BEFORE BEGINNING INSTALLATION!

1. Check that you have received all boxes in your shipment. Each box is labeled with a **Company Content Label (see graphic below)**. Note each box as well as the total number of boxes in the shipment.

IMPORTANT: Checking all of your inventory will ensure that you have all the materials you need before you start. It will also make the installation process run smoother and will help to prevent any delays along the way.

IMPORTANT: Checkoff items as you take inventory.

Content Label

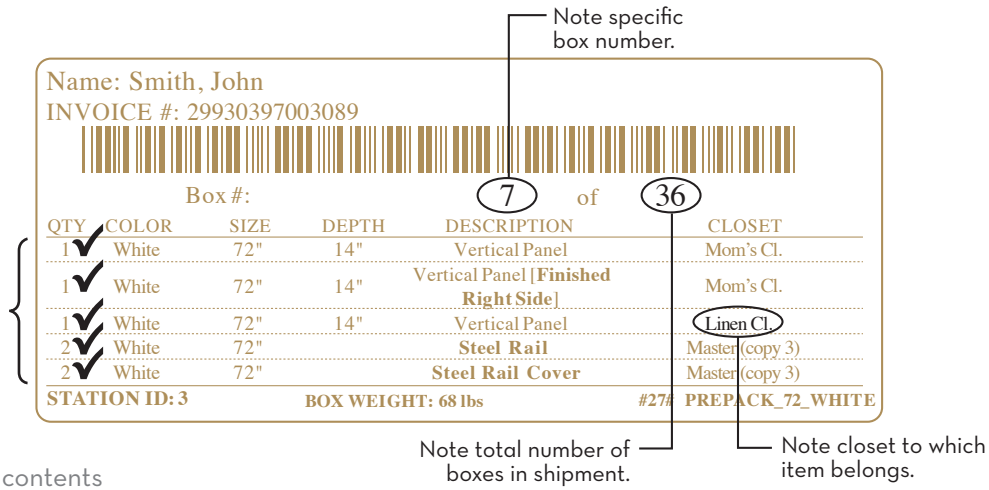

2. **Open each box** and compare the contents against the itemized list on the Shipping Label. **You may discover that we have included scrap boards of various sizes as fillers in the shipping cartons. These may be discarded.**

3. **Organize the material** into like sizes. If there are multiple organization systems, you may prefer to separate the materials first by space, based on the itemized list on the shipping labels.

4. **Take a full inventory.** Use either the **"Complete Parts List," (as shown in the graphic to the right)** or the "Parts List" for each design as a checklist. If any pieces are damaged, missing, or incorrect, please keep all packing material and contact **Customer Service** at 1-800-218-2492.

Complete Part List

ORDER SUMMARY
Client Name: Example Person
Invoice # : 00000000000000

VERTICALS

Qty	Name	Height	Depth	Color
5	Vertical Panel	72	14	White
6	Radius Vertical Panel	48	14	White
1	Radius Vertical Panel	24	14	White

REGULAR SHELVES

Qty	Name	Height	Depth	Color
2	Regular Shelf	29 7/8	14	White
8	Regular Shelf	23 7/8	14	White

CAM SHELVES

Qty	Name	Height	Depth	Color
2	Cam Shelf	30 7/8	14	White
4	Cam Shelf	30 3/8	14	White
3	Cam Shelf	29 7/8	14	White
4	Cam Shelf	26 7/8	14	White
7	Cam Shelf	23 7/8	14	White
1	Half Cam - Left	10 3/8	14	White
1	Half Cam - Right	10 3/8	14	White

DRAWER / HAMPER FACES

Qty	Name	Height	Depth	Color
1	Drawer Face (Raised Panel) (Pre-Drilled for Knobs)	29 7/8	12	White
3	Drawer Face (Raised Panel) (Pre-Drilled for Knobs)	29 7/8	8	White
1	Drawer Face (Raised Panel) (Pre-Drilled for Knobs)	29 7/8	5	White
1	Drawer Face (Raised Panel) (Pre-Drilled for Knobs)	23 7/8	12	White
4	Drawer Face (Raised Panel) (Pre-Drilled for Knobs)	23 7/8	8	White

DRAWER BOXES

Qty	Name	Color	Width	Height	Depth
1	Drawer Box	White	29 7/8	12	14
3	Drawer Box	White	29 7/8	8	14
1	Drawer Box	White	29 7/8	5	14
1	Drawer Box	White	23 7/8	12	14
4	Drawer Box	White	23 7/8	8	14

DRAWER BOXES

Qty	Name	Color
84	#6 - 5/8" screws	
10	14" Full Extension Drawer Glides (PAIR)	
80	Cam Fittings	White Plastic
4	Connector Brackets	
16	Double Cam Screw	
20	Drawer Face Adjuster Screws	
10	Drawer Knob	Polished Chrome
10	Drawer Knob Screws	
42	Euro Screws	
11	Rod Ends (Pair)	Polished Chrome
40	Shelf Pins	
48	Single Cam Screw	
4	Steel Rail (Width:72)	
4	Steel Rail Cover (Width:72)	
48	Steel Rail Screws	
12	Toggle Bolt	

RODS

Qty	Name	Width	Color
2	Hanging Rod	30 5/8	Polished Chrome
4	Hanging Rod	30 1/8	Polished Chrome
4	Hanging Rod	26 5/8	Polished Chrome
1	Hanging Rod	23 5/8	Polished Chrome

ACCESSORIES

Qty	Name	Color
1	Tie Rack	Polished Chrome

REMOVE OLD STORAGE MATERIAL

1. Remove any existing shelving or units.

2. If desired, fill holes with spackling and repaint walls. As you fill in the holes, note these locations, as they often mark the locations of the studs.

INSTALL RAIL FOR A REACH-IN SPACE

IMPORTANT: Follow these instructions carefully! The rail installation is the most critical part of the installation.

1. PLAN YOUR RAIL LAYOUT: Review your design plans. You will need to install the rail on the wall behind all of the sections in your space. Please check your invoice for any special customer notes.

2. DETERMINE RAIL HEIGHT:
Rail height = Top shelf height – 8-1/4". You will install the rail with its bottom edge on the rail line.

3. If your design includes floor-based sections, this will determine your rail height. Set your tall, floor-based vertical panel on the floor against the wall, and mark where the top of the panel reaches on the wall. Measure down 8-1/4" from this point, and draw a level line to mark the rail height.

4. If your design is completely wall-mounted, you can determine your rail height. For a typical 84" top shelf location, the rail is 8-1/4" less so it is installed at 75-3/4". Alter as needed. Draw a level line to mark rail height location.

NOTE: Sloped ceilings and staggered top shelf heights require multiple rail heights. See special instructions.

NOTE: Verticals and shelves cannot install tight to a ceiling or soffit. Allow 1" gap.

Topshelf Height	Subtract	Rail Location
84"	8-1/4"	75-3/4"
83-15/16"	8-1/4"	75-11/16"
?	8-1/4"	

5. LOCATE AND MARK STUDS: Use a stud finder, or tap the wall & listen to locate studs.

NOTE: Standard 2" x 4" studs are usually located 16" on center measured from the left or right end of the wall.

6. Confirm location by driving a finishing nail or screw above rail line. Any holes will be covered by the rail. Once the first stud is found, mark it (X) and measure over 16" for the next stud.

7. MARK EACH VERTICAL PANEL LOCATION: Mark the approximate location of each vertical panel with masking tape by referring to each unit wall plan. Note that vertical panels are 3/4" thick and section interior widths are indicated below each wall plan.

8. ESTABLISH RAIL LENGTHS: If your wall is wider than 72", you can cut two or more pieces of rail so that they meet at a wood stud location. Each piece of rail should be long enough to be anchored into a minimum of two studs for adequate strength. Choose an appropriate stud at which to have two pieces of rail meet (8a). This means that you may have to cut each piece of rail rather than using any 72" pieces(8b).

Sample design showing rail

Determine rail height & draw a level line.

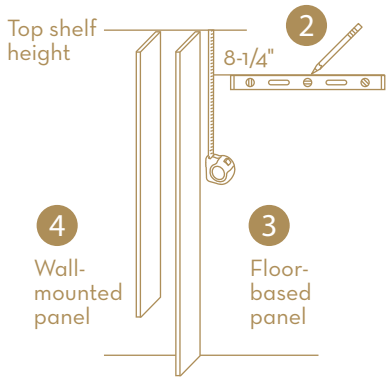

Locate and mark studs. Mark vertical panel locations.

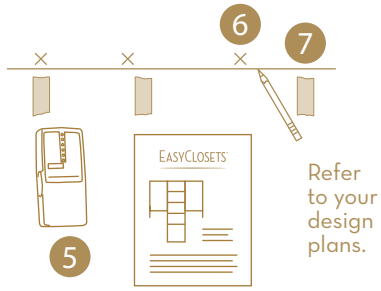

Establish rail lengths.

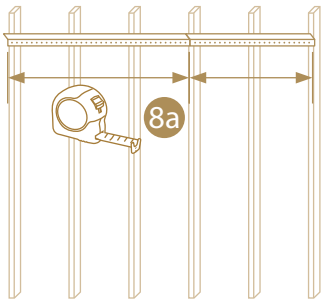

Two rail pieces must meet at a stud.

Cut your rail(s) to length using a hacksaw.

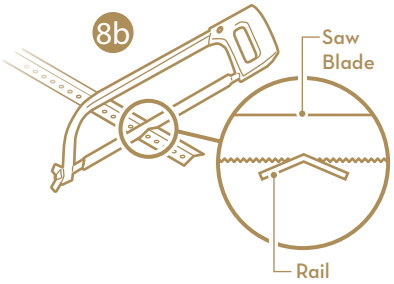

Subtract 1/4" from the rail length for each finished end panel. Finished end panels are not notched completely through.

9. **ANCHOR YOUR RAIL WITH SCREWS AND E-Z TOGGLES:**
Determine where Toggles may be needed

10. **Toggles are required whenever**
- a vertical panel is more than 3" from a wood stud or
- a rail end does not coincide with a wood stud location.

11. Mark the Toggle locations by holding the rail with the bottom edge on the rail height line on the wall. Mark the wall through the rail holes where Toggles are required. Set rail aside.

12. Install Toggle anchors.

TIP: Examine an Toggle closely and push a screw into it to understand how it functions.

TIP: If wall has insulation which prevents toggle from engaging, drill 1/8" hole and use a small wire like a hanger to push insulation back.

IMPORTANT: Never use substitutes for the toggles! Plastic anchors or "Molly Bolts" will not work!

13. Drive black rail screws into available studs at all locations. We recommend two screws per stud where possible.

TIP: Lubricate screws on a bar of soap or candle to ease driving. Angle screws if necessary. If possible, try not to install rail screws directly under a vertical.

IMPORTANT: Do not use substitute hardware.

IMPORTANT: EZ Toggles only work with 1/2" or 5/8" thick drywall.

Metal studs? If you indicated that you have metal studs, we would have provided only Toggles. Avoiding the metal studs, install Toggles every 6" – 8" and two at each rail end as shown nearby. Drive rail screws into metal studs, drill pilot hole as needed.

Masonry walls? If you indicated that you have masonry walls, we would have provided only 2-3/4" masonry screws plus a masonry drill bit. Drill pilot holes at least 1/4" deeper than the screw penetration and install masonry screws every 6" – 8" and at each rail end.

14. **MAKE SURE THE RAIL IS STRAIGHT:** It is important to ensure that the rail is reasonably straight. The rail must conform to the shelving system and not to an imperfect wall. Use a long straight edge, such as a 4 foot level or a vertical panel, to locate any hollows or bulges in the wall. Wherever the wall hollows, loosen the rail screws, insert shims between the rail and the wall and retighten the rail screws. Shims may be any solid, thin material. Another sign indicating that shimming is necessary is experiencing difficulty drawing the cam shelves and vertical panels together later in the installation.

IMPORTANT: Failure to shim the rail on a wavy wall will cause the vertical panel notches to break!

IMPORTANT: Do not install rail cover at this time! The rail cover will be installed after vertical panels are hung.

Add Toggles between studs, where required.

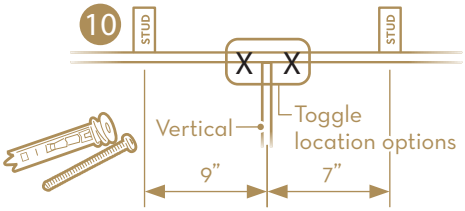

If a vertical panel is more than 3" from the nearest stud, add a Toggle close to but not under vertical.

Add Toggles when rail does not end at a stud.

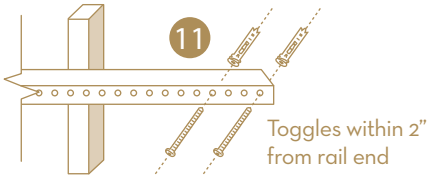

Install Toggle Anchor

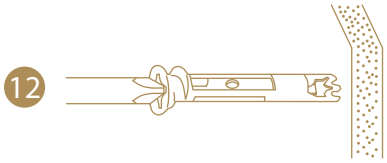

Drive anchor into drywall until the flange is flush with the wall surface and arrows point up and down.

Install Toggle Screw with hand screwdriver.

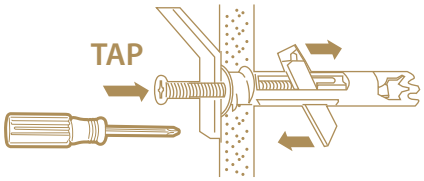

Tap screw to deploy clamp. Turn screw 20-25 complete revolutions to tighten. Do not overtighten or the drywall will be weakened. **DO NOT USE CORDLESS DRIVER OR IMPACT DRIVER.**

Install rail screws; 2 per stud

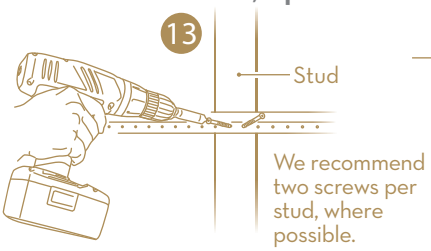

Shim rail, if necessary.

INSTALL RAIL FOR A WALK-IN SPACE

IMPORTANT: Follow these instructions carefully! The rail installation is the most critical part of the installation.

1. PLAN YOUR RAIL LAYOUT: Review your design plans. You will need to install the rail on the wall behind all of the sections in your space. Please check your invoice for any special customer notes.

2. DETERMINE RAIL HEIGHT:

Rail height = Top shelf height – 8-1/4"
You will install the rail with its bottom edge on the rail line.

3. If your design includes floor-based sections, this will determine your rail height. Set your tall, floor-based vertical panel on the floor against the wall, and mark where the top of the panel reaches on the wall. Measure down 8-1/4" from this point, and draw a level line to mark the rail height (Fig. 1).

NOTE: Verticals and shelves cannot install tight to a ceiling or soffit. Allow 1" gap.

Sloped ceilings and staggered top shelf heights require multiple rail heights. See special instructions.

4. If your design is completely wall-mounted, you can determine your rail height. For a typical 84" top shelf location, the rail is 8-1/4" less so it is installed at 75-3/4" (4a). Alter as needed. Draw a level line to mark rail height location (4b).

5. LOCATE AND MARK STUDS: Use a stud finder, or tap the wall & listen to locate studs.

NOTE: Standard 2" x 4" studs are usually located 16" on center measured from the left or right end of the wall.

Topshelf Height	Subtract	Rail Location
84"	8-1/4"	75-3/4"
83-15/16"	8-1/4"	75-11/16"
?	8-1/4"	

6. Confirm location by driving a finishing nail or screw above rail line. Any holes will be covered by the rail. Once the first stud is found, mark it (X) and measure over 16" for the next stud.

7. MARK EACH VERTICAL PANEL LOCATION: Mark the approximate location of each vertical panel with masking tape by referring to each unit wall plan. Note that vertical panels are 3/4" thick and section interior widths are indicated below each wall plan.

Sample plan & rail layout

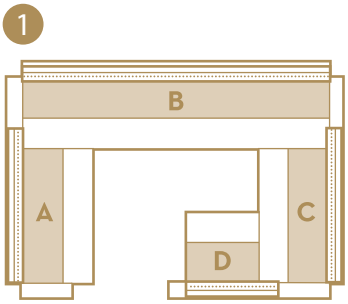

Determine rail height.

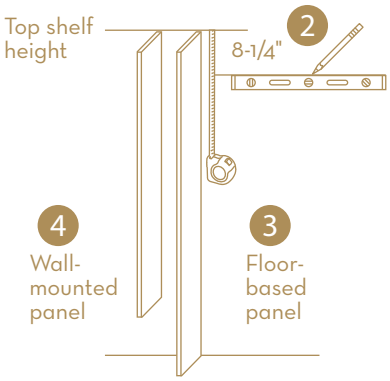

Draw a level line.

Locate and mark studs.
Mark vertical panel locations.

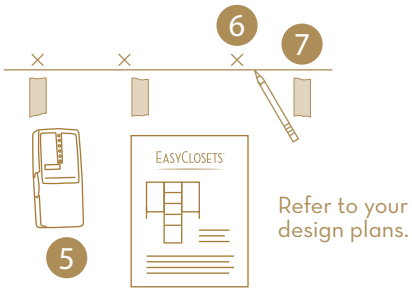

8. ESTABLISH RAIL LENGTHS: Walk-in spaces generally have some sections that run corner-to-corner and other sections that do not. Some vertical panels may also be "finished." These aspects of a walk-in space must be considered when establishing rail lengths.

It is strongly recommended that the steel rail ends be anchored to studs, whenever possible. This means running the rail past some end panels.

Finished end panels will require the rail to end 1/4" short since the vertical panel notch is not cut completely through the vertical panel.

If your wall is wider than 72", you can cut two or more pieces of rail so that they meet at a wood stud location. Each piece of rail should be long enough to be anchored into a minimum of two studs for adequate strength. Choose an appropriate stud at which to have two pieces of rail meet. This means that you may have to cut each piece of rail rather than using any 72" pieces.

Sample plan & rail layout

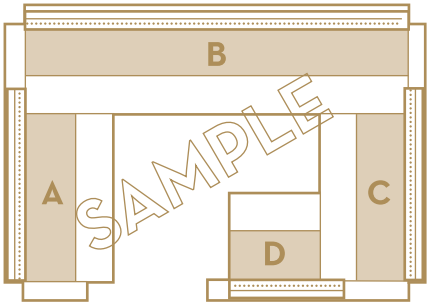

Wall A

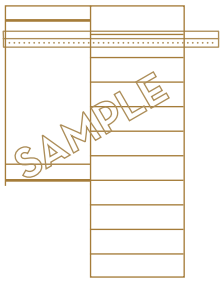

Rail runs from corner on left to stud on right, and stops short of the Wall B organizer.

Wall B

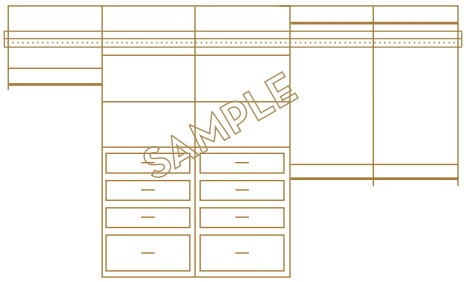

Rail runs from corner to corner.

Wall C

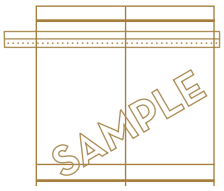

Rail runs from corner on right to stud on left, and stops short of the Wall B organizer.

Wall D

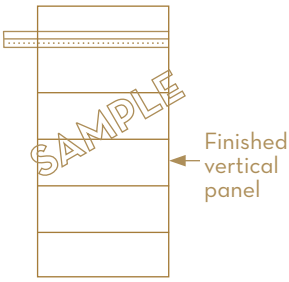

Rail runs from finished end panel less 1/4" on right, to stud on left, and stops short of the Wall C organizer.

9. Cut your rail(s) to length using a hacksaw.

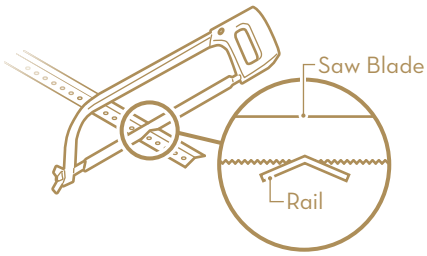

10. Establish rail lengths on a wall greater than 72".

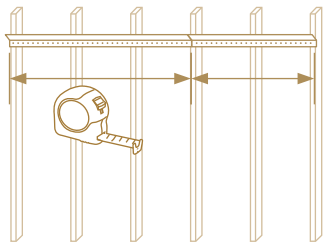

Two rail pieces must meet at a stud.

11. Add Toggles between studs, where required.

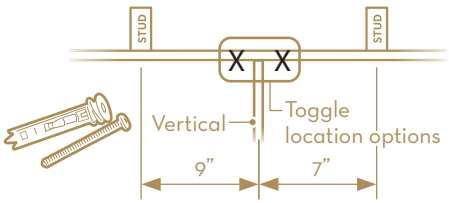

If a vertical panel is more than 3" from the nearest stud, add an Toggle close to but not under vertical.

12. Add Toggles when rail does not end at a stud.

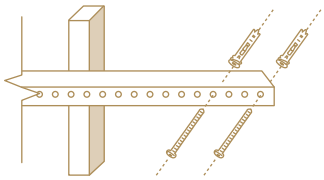

Toggles within 2" from rail end

13. **ANCHOR YOUR RAIL WITH SCREWS AND E-Z TOGGLES:**
Determine where Toggles may be needed

14. **Toggles are required whenever**
- a vertical panel is more than 3" from a wood stud or
- a rail end does not coincide with a wood stud location.

15. Mark the Toggle locations by holding the rail with the bottom edge on the rail height line on the wall. Mark the wall through the rail holes where Toggles are required. Set rail aside.

16. Install Toggle anchors.

TIP: Examine an Toggle closely and push a screw into it to understand how it functions.

TIP: If wall has insulation which prevents toggle from engaging, drill 1/8" hole and use a small wire like a hanger to push insulation back.

IMPORTANT: Never use substitutes for the toggles! Plastic anchors or "Molly Bolts" will not work!

17. Drive black rail screws into available studs at all locations. We recommend two screws per stud where possible.

TIP: Lubricate screws on a bar of soap or candle to ease driving. Angle screws if necessary. If possible, try not to install rail screws directly under a vertical.

IMPORTANT: Do not use substitute hardware.

IMPORTANT: EZ Toggles only work with 1/2" or 5/8" thick drywall.

Metal studs? If you indicated that you have metal studs, we would have provided only Toggles. Avoiding the metal studs, install Toggles every 6" – 8" and two at each rail end as shown nearby. Drive rail screws into metal studs, drill pilot hole as needed.

Masonry walls? If you indicated that you have masonry walls, we would have provided only 2-3/4" masonry screws plus a masonry drill bit. Drill pilot holes at least 1/4" deeper than the screw penetration and install masonry screws every 6" – 8" and at each rail end.

18. **MAKE SURE THE RAIL IS STRAIGHT:** It is important to ensure that the rail is reasonably straight. The rail must conform to the shelving system and not to an imperfect wall. Use a long straight edge, such as a 4 foot level or a vertical panel, to locate any hollows or bulges in the wall. Wherever the wall hollows, loosen the rail screws, insert shims between the rail and the wall and retighten the rail screws. Shims may be any solid, thin material. Another sign indicating that shimming is necessary is experiencing difficulty drawing the cam shelves and vertical panels together later in the installation.

IMPORTANT: Failure to shim the rail on a wavy wall will cause the vertical panel notches to break!

IMPORTANT: Do not install rail cover at this time! The rail cover will be installed after vertical panels are hung.

Add Toggles between studs, where required.

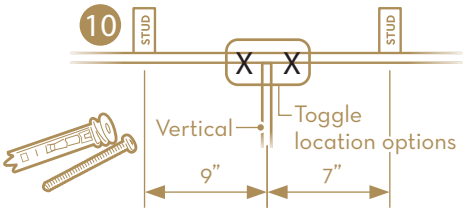

If a vertical panel is more than 3" from the nearest stud, add a Toggle close to but not under vertical.

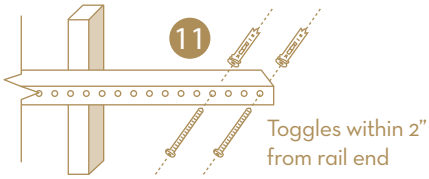

Install Toggle Anchor

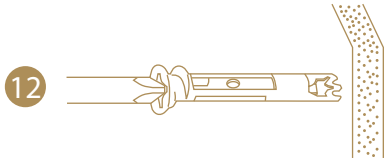

Drive anchor into drywall until the flange is flush with the wall surface and arrows point up and down.

Install Toggle Screw with hand screwdriver.

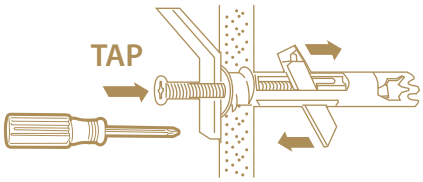

Tap screw to deploy clamp. Turn screw 20-25 complete revolutions to tighten. Do not overtighten or the drywall will be weakened. **DO NOT USE CORDLESS DRIVER OR IMPACT DRIVER.**

Install rail screws; 2 per stud

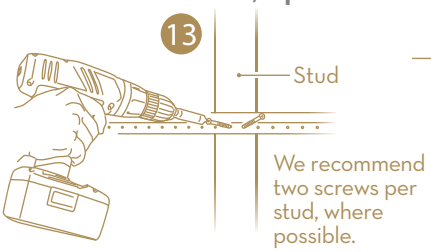

Shim rail, if necessary.

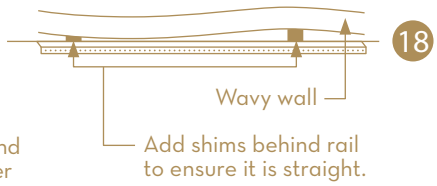

HANG VERTICAL PANELS (WALL-MOUNTED SECTIONS)

TIP: Install cam screws in top holes before hanging vertical panels. Be sure to use single and double cam screws as indicated. See Cam Shelf instructions.

Hang notched vertical panels from steel rail, leaving as much space between them as your design plans indicate.

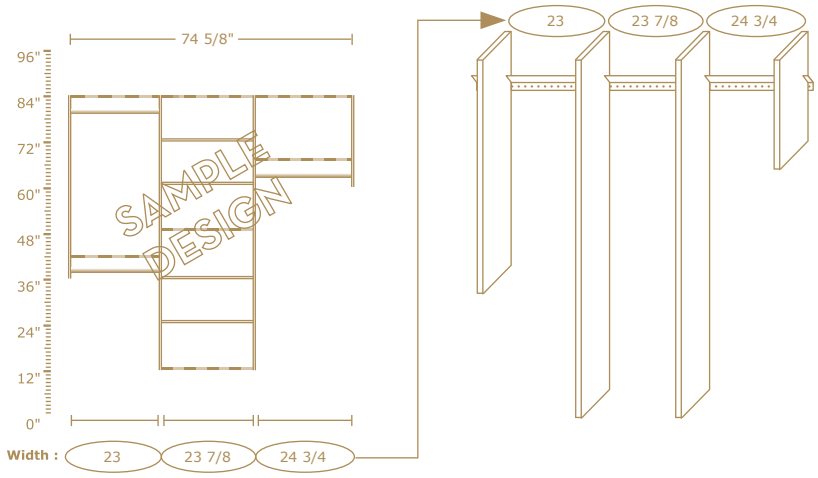

IMPORTANT: Hang vertical panel directly on steel rail, not on rail cover.

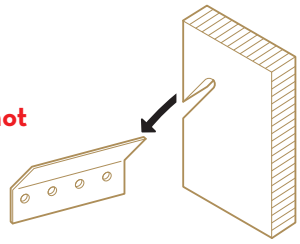

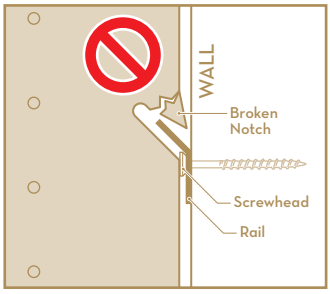

CAUTIONS: Do not install rail cover before hanging vertical panels.
Do not slide or push vertical panel along steel rail.
Do not place vertical panel directly on top of a screw or bolt head. Notch breaks when panel is hung over screw head.

IMPORTANT: If the panel must rest on a screw or bolt head, drill away a small area below the vertical panel notch. A 3/8" drill bit can be used for this. The rail cover will later conceal this modification.

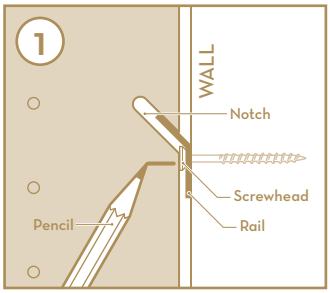

Mark hole location with pencil.

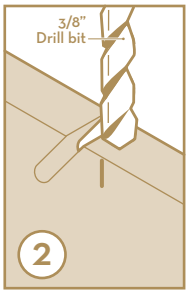

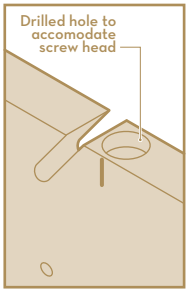

Using a 3/8" drill bit, remove a small amount of material to accomodate screw head.

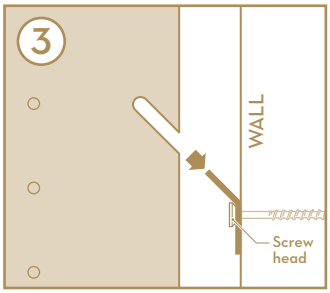

Place vertical panel onto rail.

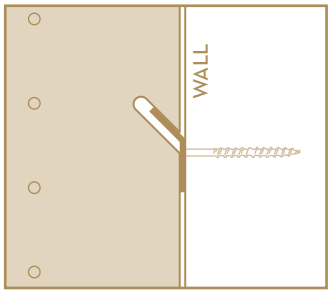

A correctly hung vertical panel will be fully seated and close to the wall.

HANG VERTICAL PANELS (FLOOR-BASED SECTIONS)

TIP: Install cam screws in top holes before hanging vertical panels. Be sure to use single and double cam screws as indicated. See Cam Shelf instructions.

Hang notched vertical panels from steel rail, leaving as much space between them as your design plans indicate.

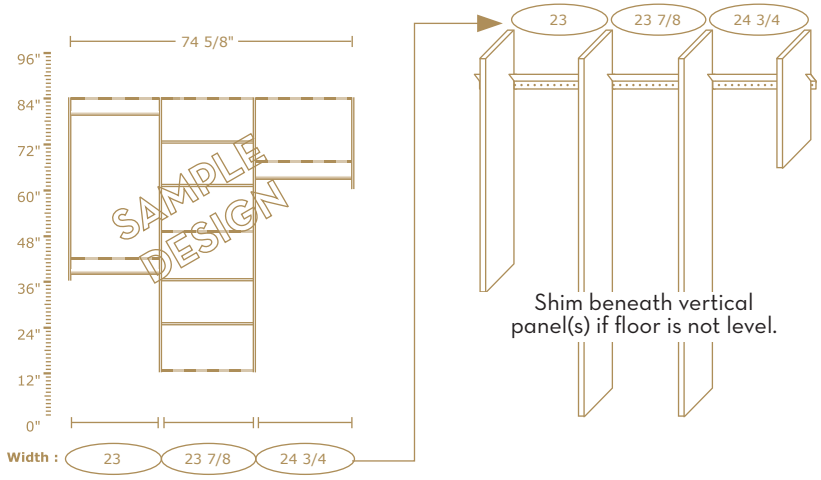

IMPORTANT: Hang vertical panel directly on steel rail, not on rail cover.

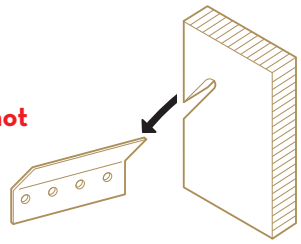

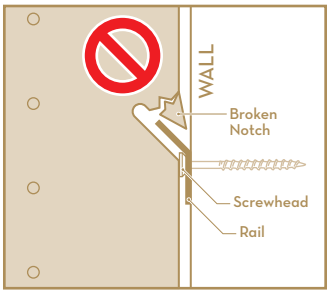

CAUTIONS: **Do not install rail cover before hanging vertical panels.**
Do not slide or push vertical panel along steel rail.
Do not place vertical panel directly on top of a screw or bolt head. Notch breaks when panel is hung over screw head.

IMPORTANT: If the panel must rest on a screw or bolt head, drill away a small area below the vertical panel notch. A 3/8" drill bit can be used for this. The rail cover will later conceal this modification.

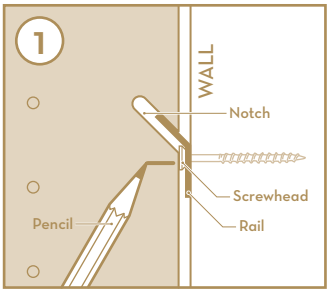

Mark hole location with pencil.

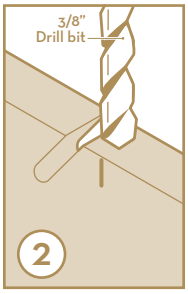

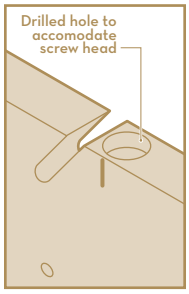

Using a 3/8" drill bit, remove a small amount of material to accomodate screw head.

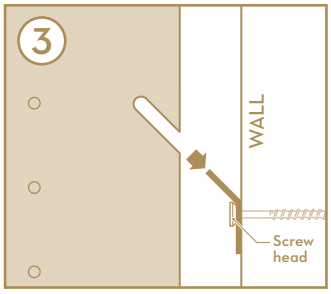

Place vertical panel onto rail.

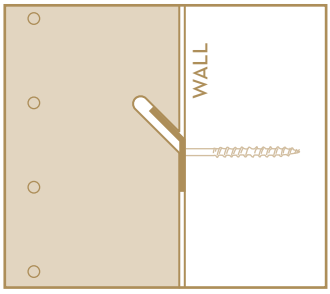

A correctly hung vertical panel will be fully seated and close to the wall.

VERTICAL PANELS AND BASEBOARD MOLDING

To accommodate your baseboard molding, you must either (1) remove it during installation, or (2) cut the vertical panels and possibly bottom cam shelves.

NOTE: We recommend that you remove your baseboard molding, if you have floor-based units. After installing your organizer, reinstall pieces of the molding in any areas not covered by the units.

Floor-Based Vertical Panel

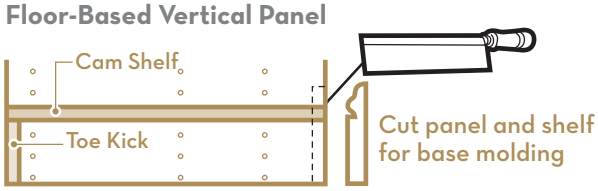

PREPARE CAM SHELVES AND INSTALL TOP SHELVES

Cam shelves are installed with cam and bolt connectors which makes them semi-permanent and creates a more rigid structure.

Some cam shelf locations are exactly determined...by drawers, for example. Other cam shelves may be positioned according to personal needs or preferences.

We'll make recommendations for all of your cam shelf locations.

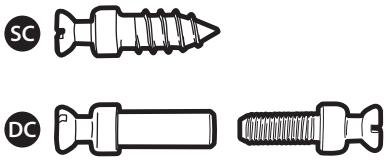

1. INSERT CAM FITTINGS INTO CAM SHELVES USING A HAMMER OR MALLET.

TIP: Insert two at a time. Position cam fittings over cam shelf holes. Then place another shelf on top and press down with the palms of your hands.

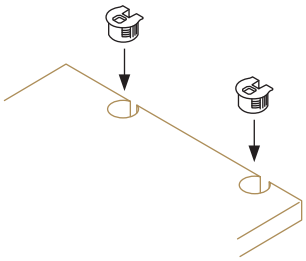

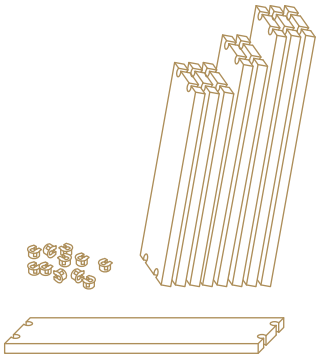

TIP: Prepare all of your cam shelves at once and stack according to size for easy locating later.

2. UNDERSTAND THE HARDWARE

Use double cam (DC) screws where cam shelves are installed at the same height on the left and right side of a vertical panel. Use single cam screws (SC) everywhere else.

Do not use single cam screws back-to-back.

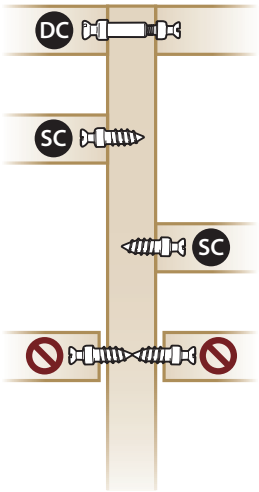

3. INSTALL TOP CAM SHELVES FIRST

Some designs include connector shelves. Install double cam screws for these.

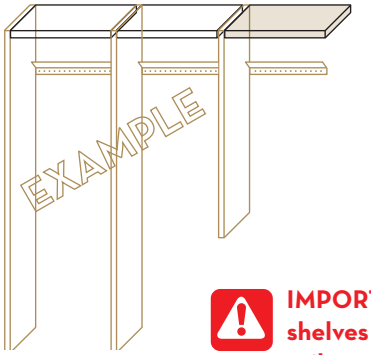

4. INSTALL CAM SCREWS

TIPS:

- **Use a #2 Phillips bit that is in good condition.**
- **Turn cam screw in slowly to avoid breakage.**
- **Do not spin screwdriver tip in screw head.**

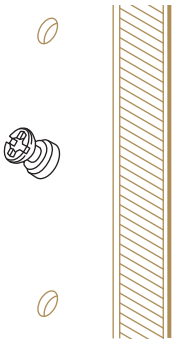

IMPORTANT: Hard-to-close gaps between cam shelves and vertical panels indicate that the rail needs to be shimmed straighter. Review rail instructions.

5. PLACE CAM SHELF ONTO CAM SCREWS

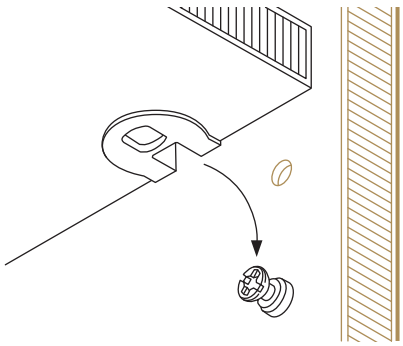

6. LOCK CAM FITTINGS

Use a #2 Phillips screwdriver. 1/4 - 1/2 clockwise turn **ONLY. DO NOT FORCE.**

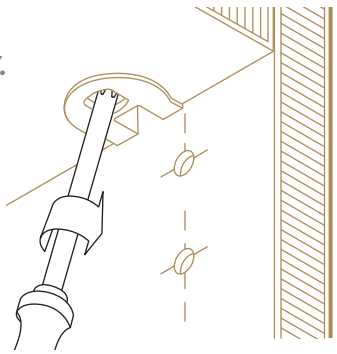

7. LAYOUT REMAINING CAM SHELF POSITIONS

As you continue your installation, some cam shelf positions are exactly determined by the components which we will clearly explain for each component.

For other cam shelves, we'll offer recommended locations.

INSTALL CAM SHELVES IN HANGING AND SHELF SECTIONS

Recommended shelf and hanging rod positions are illustrated below for a typical installation with a standard top shelf height of 84.

1. Install top cam shelves as described in previous section, taking care to use single and double cam screws where required.

TIP: Use shelf pins and rod ends as place holders to lay out shelf and rod locations before installing cam screws.

2. Install adjustable shelves with shelf pins after all cam shelves are installed.

Recommended Number of Open Holes Between Shelves and Hanging Rods in a Typical Design

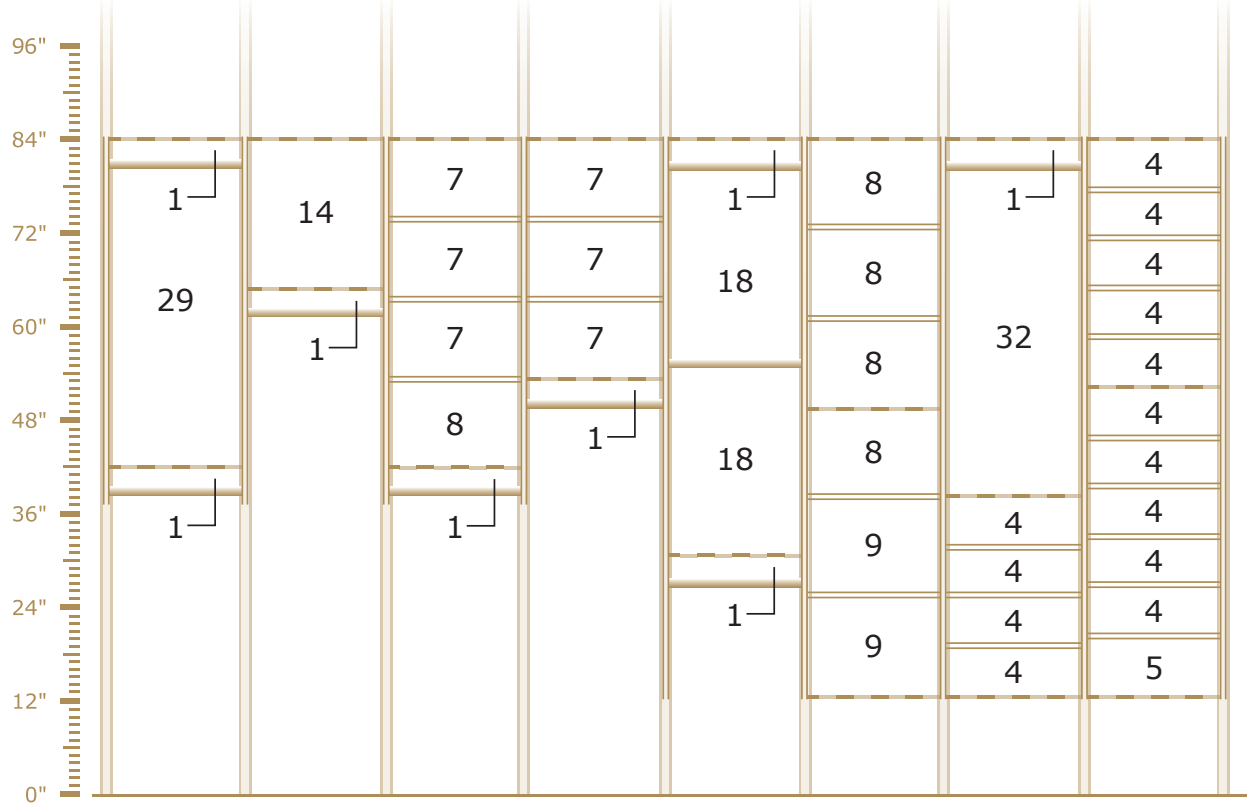

TIP: Low cam shelves can be installed easily by locking the rear cam fittings while the shelf is tilted up like a theater seat. You may need to pull the unit away from the wall slightly to avoid scraping the wall as you lower the front of the shelf. A stubby or offset screwdriver is needed to lock the front cam fittings.

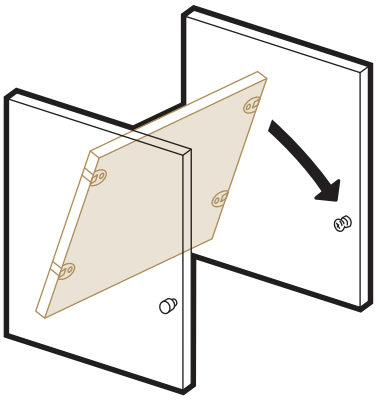

INSTALL CAM SHELVES IN DRAWER SECTIONS

Cam shelves at the top of a stack of drawers are easy to position and install. It just requires a little math and counting.

NOTE: If you have locking drawers, a special, grooved locking cam shelf must be installed immediately above each locking drawer. See drawer lock instructions.

1. Install the bottom cam shelf according to your design.

Most drawer section bottom cam shelves in wall-mounted designs will be located in the bottom-most vertical panel holes.

NOTE: If your design includes floor based sections with a toe kick below the bottom cam shelf, you will need to position the bottom cam shelf the correct number of holes from the bottom of the vertical panel.

TOE KICK HEIGHT	CAM SHELF POSITION
3-3/4"	4th Hole
2-1/2"	3rd Hole

2. Use the worksheet here to determine the position of the cam shelf at the top of a stack of drawers.

Example:

26 open holes between cam shelves for this example.

Zero 5" drawers, three 8" drawers, one 12" drawer.

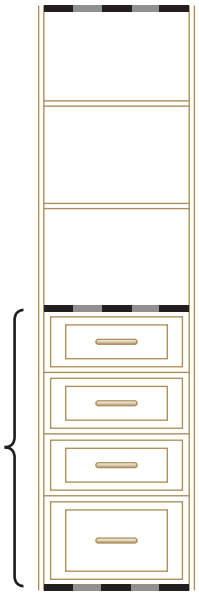

CAM SHELF WORKSHEET	EXAMPLE CALCULATION	YOUR CALCULATION
1. Multiply the number of 5" drawers by 4 and enter the value. (Example: For zero 5" drawers, enter 0x4 = 0)	0	
2. Multiply the number of 8" drawers by 6 and enter the value. (Example: For three 8" drawers, enter 3x6 = 18)	18	
3. Multiply the number of 12" drawers by 9 and enter the value. (Example: For one 12" drawer, enter 1x9 = 9)	9	
4. Add lines 1 thru 3	27	
5. Subtract 1 from line 4	-1	-1
6. Number of open holes between cam shelf below drawer(s) and cam shelf above drawer(s)	26	

3. Refer to drawer instructions to complete your drawer sections.

TIP: Use shelf pins as place holders to lay out shelf and drawer glide locations before finally installing screws.

TIP: Low cam shelves can be installed easily by locking the rear cam fittings while the shelf is tilted up like a theater seat. You may need to pull the unit away from the wall slightly to avoid scraping the wall as you lower the front of the shelf. A stubby or offset screwdriver is needed to lock the front cam fittings.

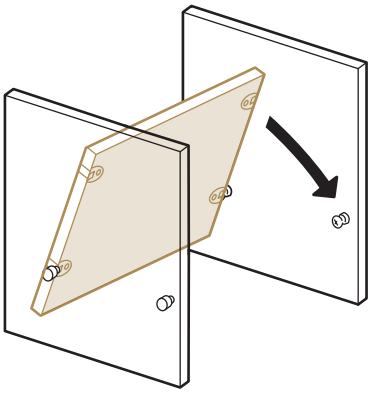

VERTICAL PANEL WORKSHEET

The common size vertical panels shown on this page are drawn to scale, including the correct number of 5 mm holes. Use these diagrams to lay out your components and better understand the 32 mm system. Mark the holes where cam screws, drawer & basket glides and rod ends are required. Every fifth hole from the bottom of each panel is marked for your convenience.

NOTE: "C" (Cam) is used on layout to help the customer understand and visualize the cam shelf and glide patterns as per their design. Cam shelf is not to be installed between drawers unless required for a lock. Print more copies of this worksheet from the online installation manual.

Example Panel Marked for 4 Drawers and 2 Cam Shelves

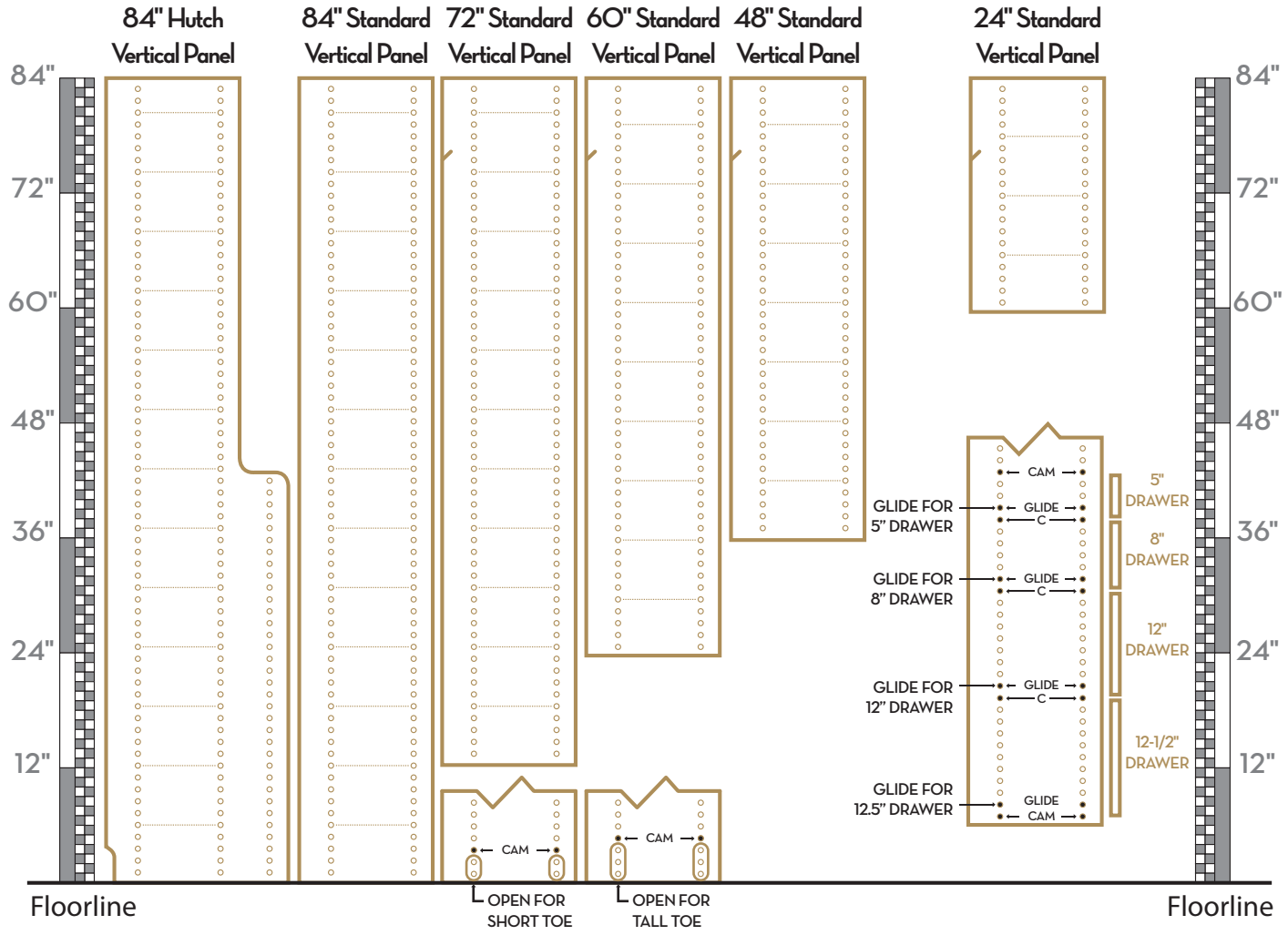

INSTALL TOE KICKS

1. Use mallet to pound toe-kick cams into the pre-drilled holes in the toe-kick.

2. Install toe kick bolts in the second hole from the bottom, and orient the toe-kick so the cam aligns with the bolt.

3. Slide the toe-kicks under the bottom shelf until it snaps onto the cam screws.

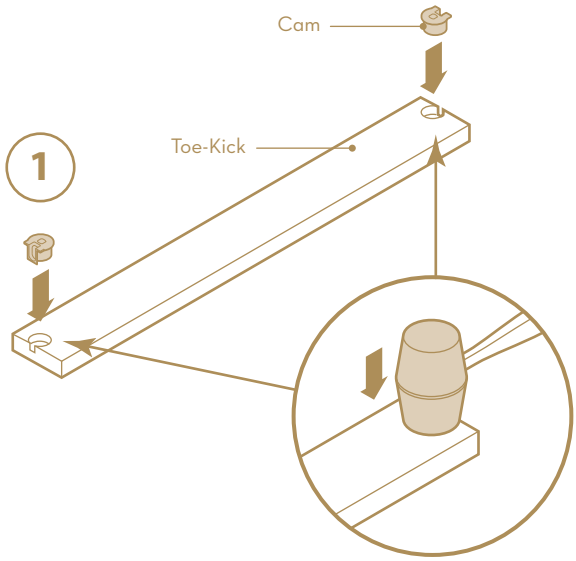

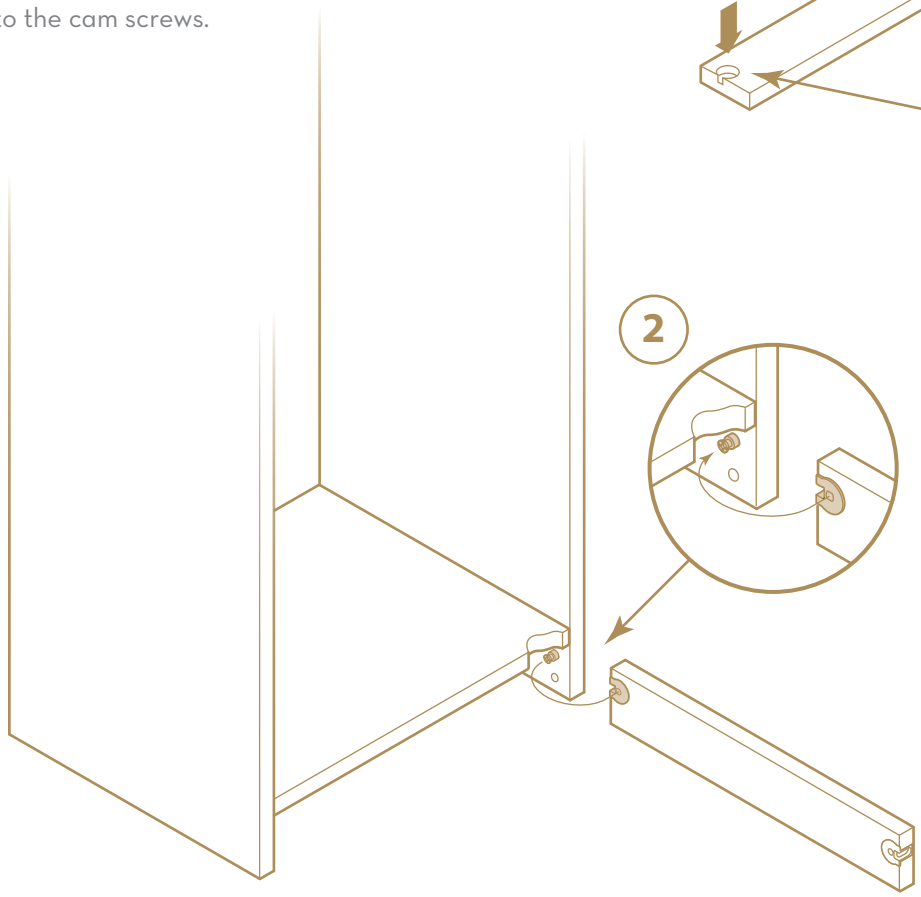

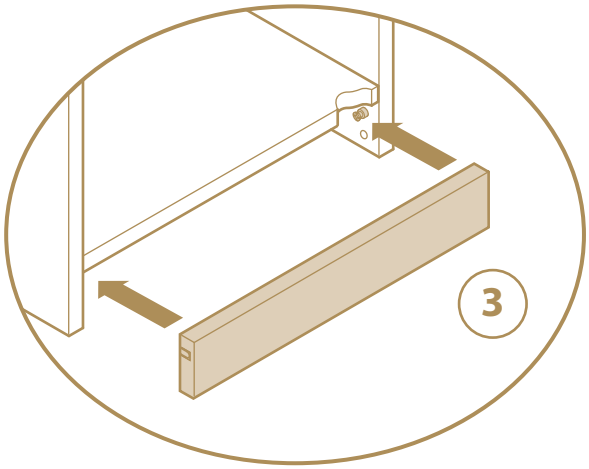

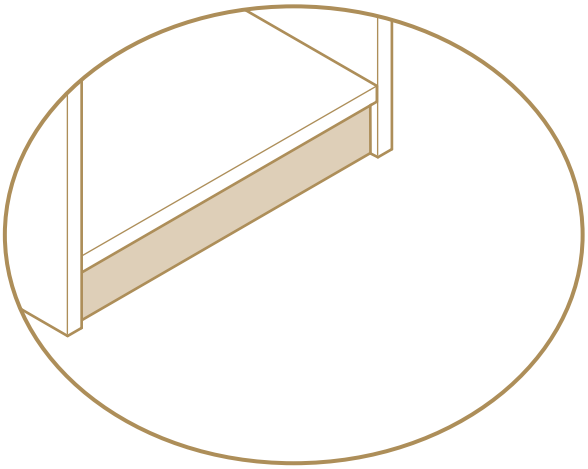

INSTALL CLEATS UNDER VERTICALS OF TALL SECTIONS

All wall-mounted units 78" or taller must be cleated for additional support. A cleat is 3" high and the full width of the unit(s) to be cleated. Some custom designed units may also require cleating, which will be noted either in the "Notes" section of your invoice or marked on your wall plans.

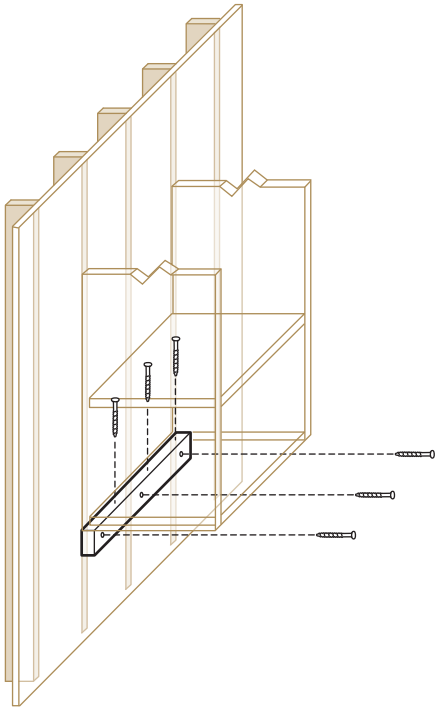

1. **Install unit(s) to be cleated:** Install unit(s) to be cleated using the Basic Installation Instructions at the beginning of this manual. Use a level to ensure the sides are plumb.
2. **Attach cleat to wall studs:** Position the cleat flat against the wall beneath the unit. The cleat must be in contact with the bottom of the vertical panels. Attach cleat to wall studs using rail screws or toggle bolts.
3. **Pre-drill holes in bottom cam shelf:** Drill 3/16" diameter holes near the rear edge through the bottom cam shelf only.
4. **Attach unit to cleat:** Attach unit to cleat with 2" screws, driving them through pilot holes in cam shelf into cleat. If there is no cam shelf at the very bottom of the vertical panels (which can occur with pull-out baskets), you can secure the bottom-most cam shelf to a stud in the wall with an L-bracket.

IMPORTANT: Omitting these parts from your installation may void the warranty.

INSTALL CLEATS UNDER TOP CAM SHELF

All wall-based units with only 24" vertical panels or shorter must be cleated to hold the top of the unit to the wall. The cleats will be 3" high and equal to the shelf widths.

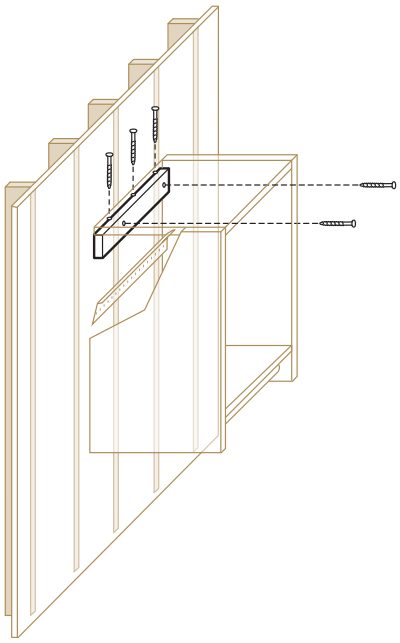

1. **Install unit(s) to be cleated** following the Basic Installation Instructions and confirm system is level and plumb.
2. **Position the cleat** against the wall just below the top cam shelf.
3. **Locate studs and drill 3/16" holes** through cleat for screws or toggle bolts.
4. **Anchor cleat** into wood studs with 2" screws or using Toggles if no studs are present.
5. **Anchor the top cam shelf to the cleat** with 2" screws through 3/16" thru-holes which you must drill near the rear of the top cam shelf.

   Alternatively, you may screw the top cam shelf to the cleat first, before installing the shelf, and then anchor the cleat to the wall.

IMPORTANT: Omitting these parts from your installation may void the warranty.

INSTALLING L-BRACKETS

L-brackets are supplied to stabilize or anchor units in certain circumstances. Find the example below that is similar to your system and install the L-brackets and/or cleat as shown. Confirm system is level and plumb first.

IMPORTANT: Omitting these parts from your installation may void the warranty.

NOTE: Cam shelf indicated by

A. Floor-based units anchored without steel rail-short and tall verticals.
B. 24"-30" wall verticals (short).
C. Vertical panels which hang without bottom support.
D. Units which have pull-out ironing boards.
E. 31"-72" wall verticals.
F. Use for:
- **Any single section without side support**
- **Any section with a half drill vertical**
- **Any section with tall verticals 73"-78"**

G. Extremely tall verticals 79"-84".

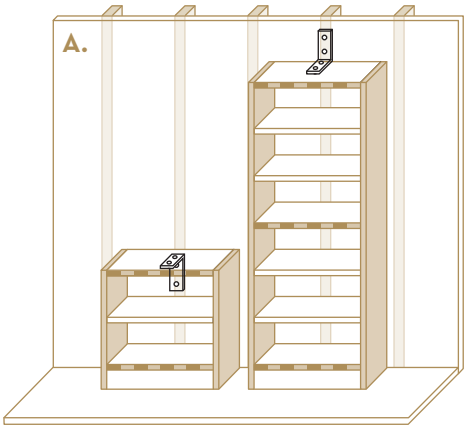

1. ANCHOR L-BRACKETS TO THE WALL WITH THE APPROPRIATE FASTENER.

- Use a 2" drywall screw into a wood stud and a 5/8" screw into shelf or vertical.
- Use a toggle bolt to clamp to drywall when no stud is available.
- Use a masonry screw to attach to masonry wall.

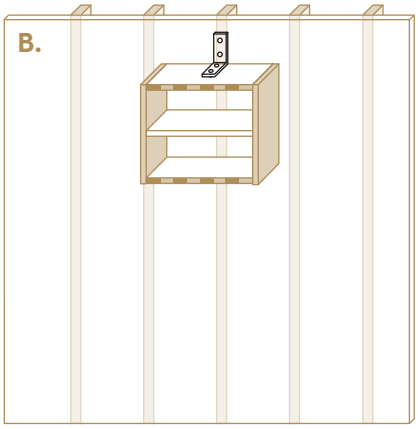

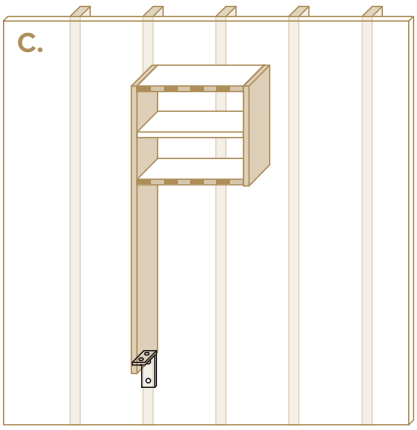

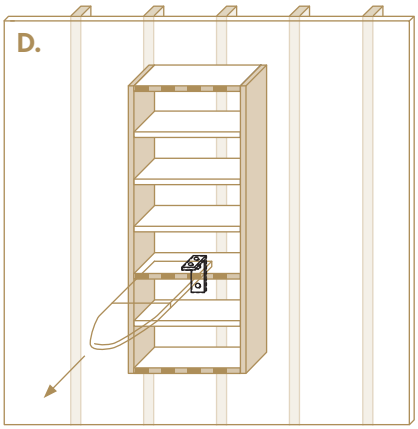

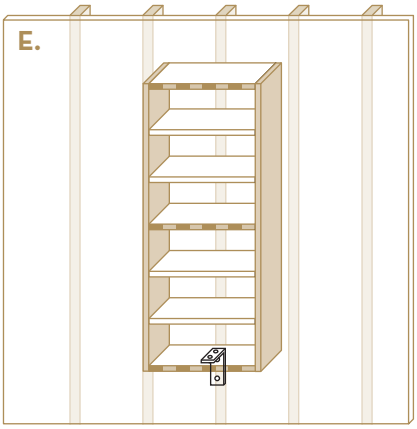

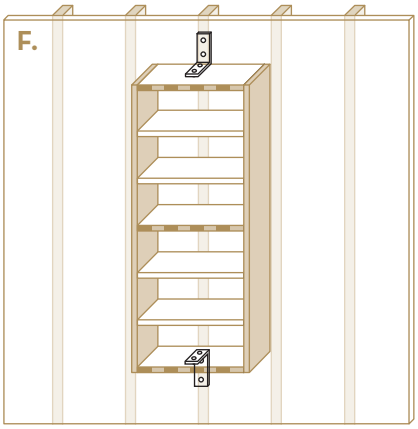

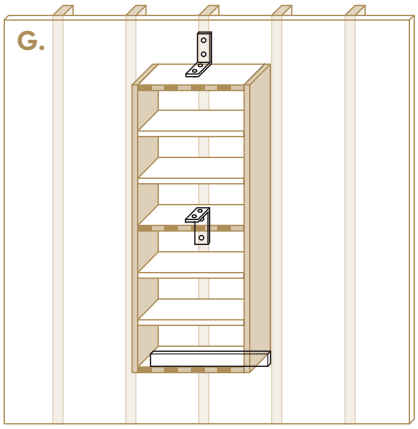

ASSEMBLE A FLOOR-BASED UNIT WITHOUT STEEL RAIL

Certain floor-based units may be assembled and anchored to the wall with L-brackets or cleats.

TIP: Before beginning, lay cardboard or other protection on your floor, if uncarpeted, near the intended location of your unit.

1. PREPARE CAM SHELVES according to previous instructions.

2. INSTALL CAM SCREWS IN TOP HOLES OF VERTICAL PANELS, taking care to use single or double cam screws as called for.

3. INSTALL CAM SCREWS FOR LOWER/BOTTOM CAM SHELVES according to your design.

4. CONNECT CAM SHELVES TO A PAIR OF VERTICAL PANELS, with the parts standing on their back edge.

NOTE: If your toe kick height is 2-1/2", install the bottom cam shelf in the 3rd hole from the bottom of the vertical panel.

If your toe kick height is 3-3/4", install the bottom cam shelf in the 4th hole from the bottom of the vertical panel.

5. CAREFULLY TIP UNIT INTO AN UPRIGHT POSITION and move into place.

NOTE: Hold or brace until anchored to wall.

6. ADD REMAINING CAM SHELVES AND VERTICAL PANELS, if the unit has more than one section.

TIP: Bottom cam shelves can be installed easily by locking the rear cam fittings while the shelf is tilted up like a theater seat. You may need to pull the unit away from the wall slightly to avoid scraping the wall as you lower the front of the shelf. A stubby or offset screwdriver is needed to lock the front cam fittings.

7. USING A LEVEL, SHIM VERTICAL PANELS, if necessary, to ensure the top is straight and level.

8. ANCHOR UNITS TO WALL STUDS, after squaring them, by fastening L-brackets to studs and cam shelves in hidden locations.

9. INSTALLATION OF TOE KICKS, BENCH TOPS, COUNTERTOPS and other components is described elsewhere in these instructions.

VERTICAL PANELS AND BASEBOARD MOLDING

To accommodate your baseboard molding, you must either (1) remove it during installation, or (2) cut the vertical panels and possibly bottom cam shelves.

Floor-Based Vertical Panel

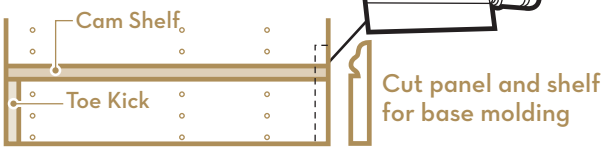

NOTE: We recommend that you remove your baseboard molding, if you have floor-based units. After installing your organizer, reinstall pieces of the molding in any areas not covered by the units.

4

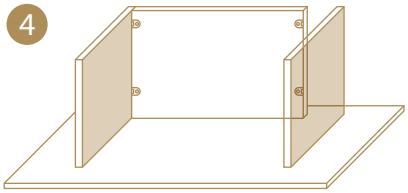

6

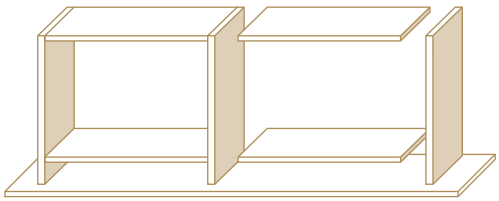

TIP

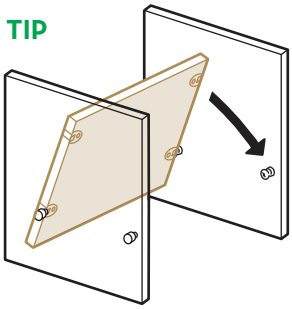

7

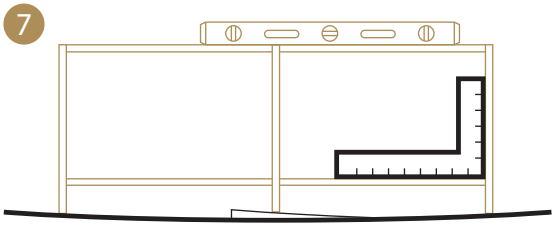

8

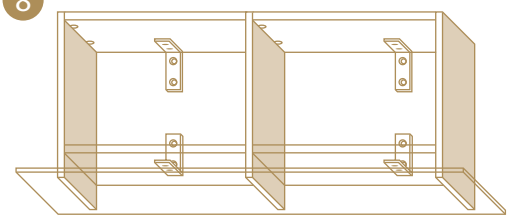

ISLANDS & FLOOR-BASED DESIGNS WITHOUT RAIL

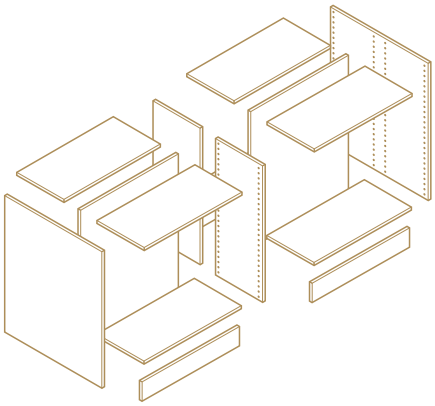

INSTALLING HARDWARE IN SHELVES AND VERTICALS

1. Place cam fittings into cam shelves (1a). Install the single cam bolt into the outside island verticals (1b). Leave two (2) holes open at bottom for short (2-1/2" tall) toe. Leave three (3) holes open at bottom for tall (3-3/4") toe.

2. Install the double cam bolts into the inside island verticals. Leave two (2) holes open at bottom for short (2-1/2" tall) toe. Leave three (3) holes open at bottom for tall (3-3/4") toe.

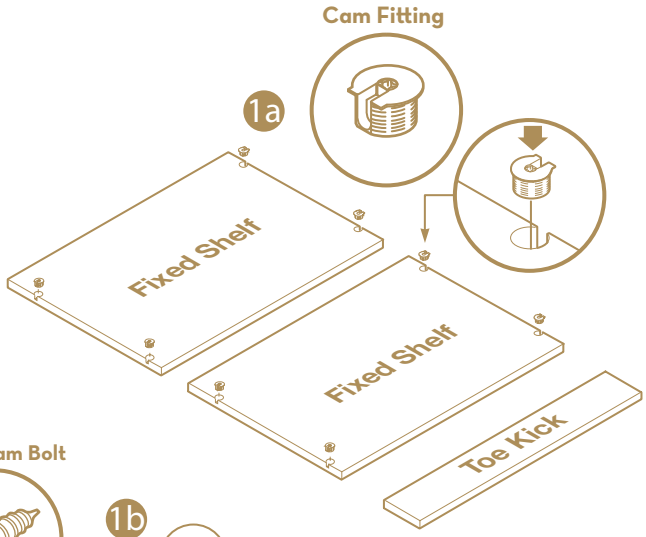

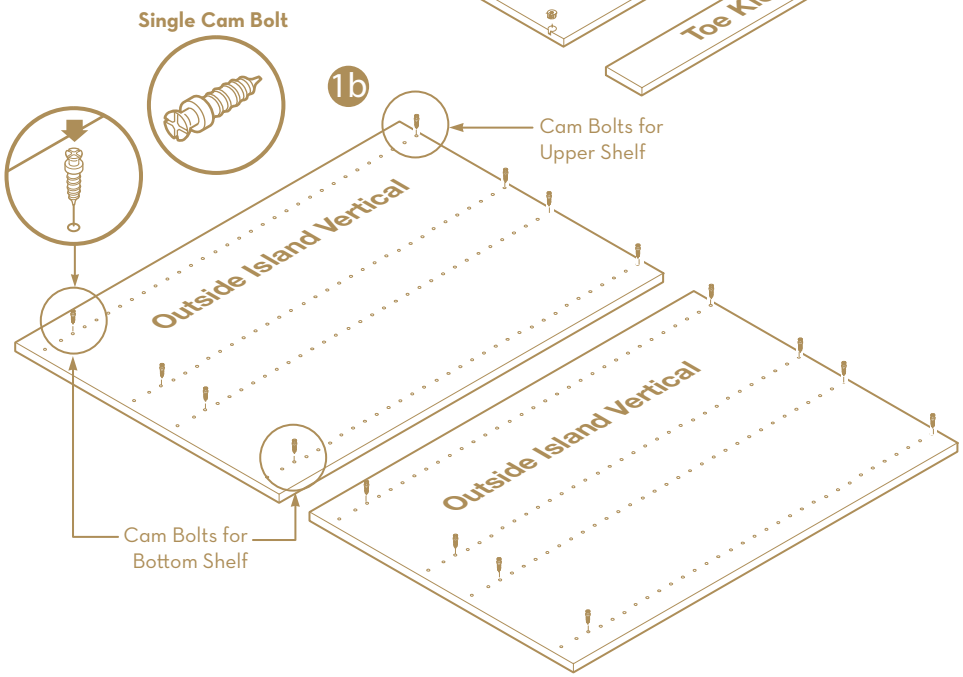

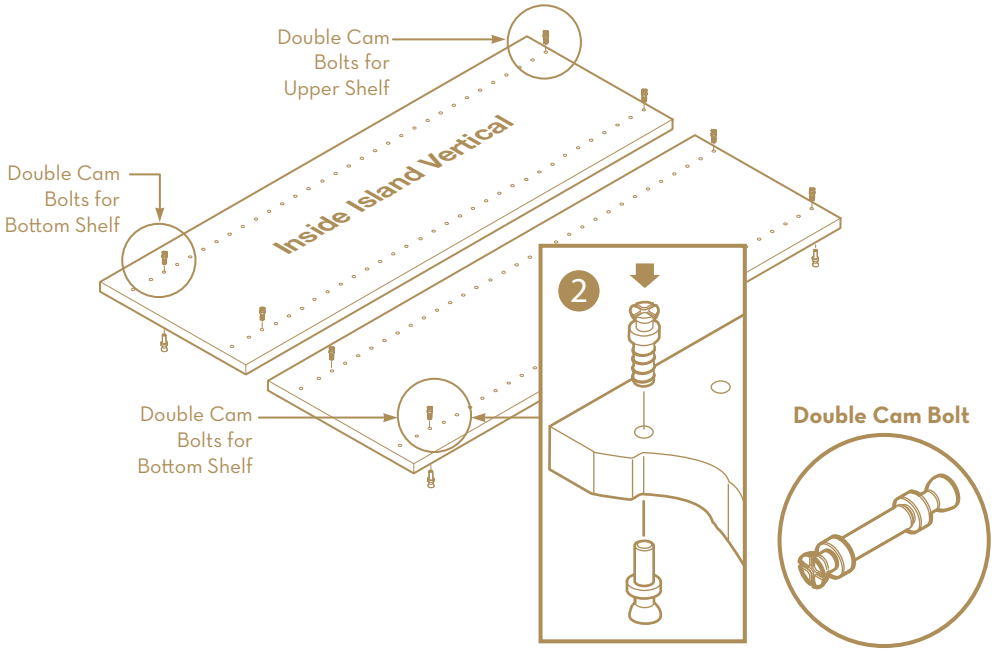

ISLANDS & FLOOR-BASED DESIGNS WITHOUT RAIL (continued)

ASSEMBLY OF ONE SIDE

1. Position outside island vertical on floor and attach top and bottom cam shelves of one section.

2. Attach toe kick to bottom cam shelf using toe kick screws.

3. Attach inside island vertical to cam shelves.

4. Attach top and bottom cam shelves of 2nd section and then attach outside island vertical.

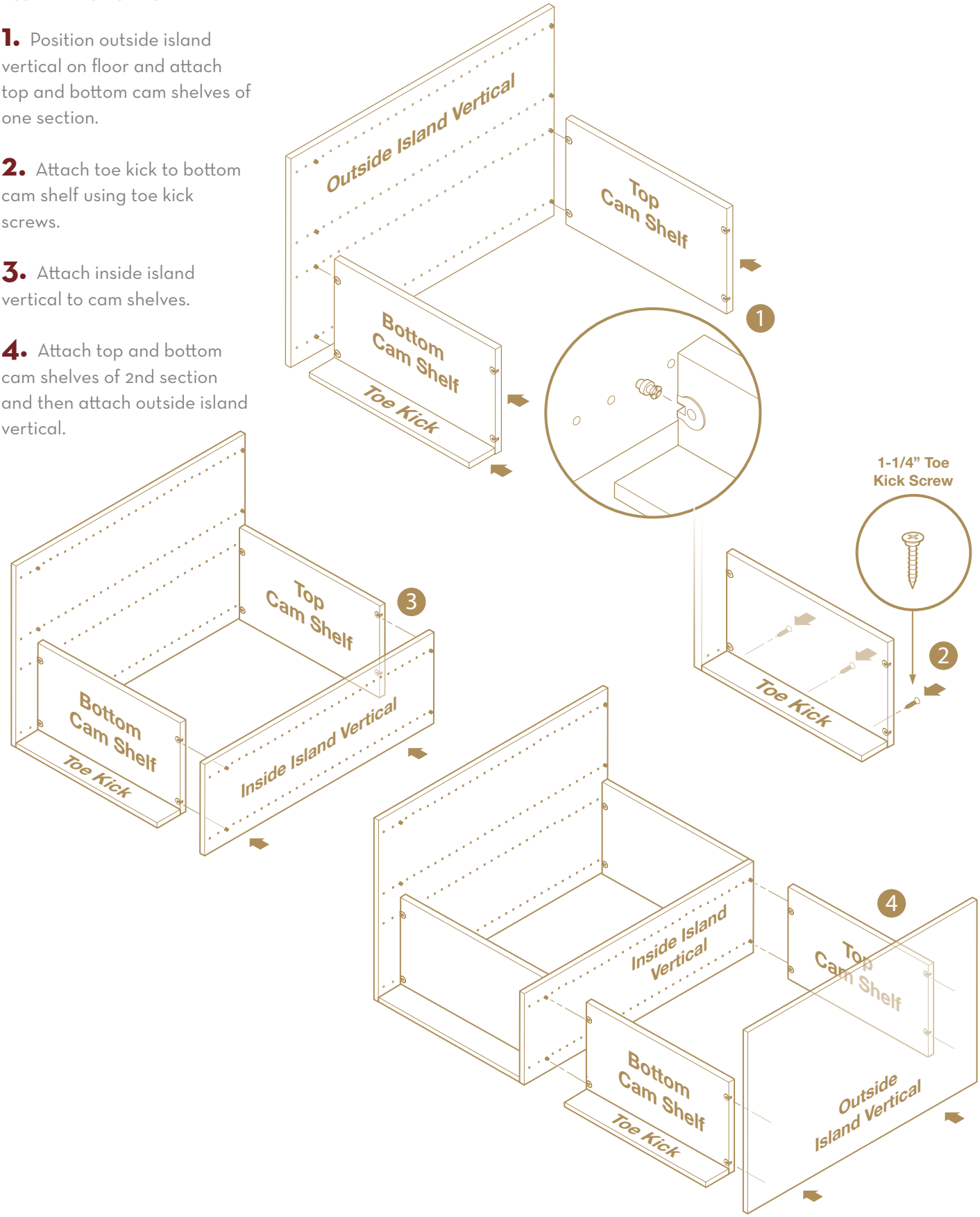

ISLANDS & FLOOR-BASED DESIGNS WITHOUT RAIL (continued)

ASSEMBLY BACK PANEL

1. Pre-drill four (4) 3/16" holes through each back panel only. Secure each back panel to shelves using four (4) 2" screws per back panel.

ASSEMBLY OF OTHER SIDE

1. Install cam shelves.

2. Install inside island vertical.

3. Install toe kick.

4. Install remaining cam shelves.

5. With a helper, carefully tip the island upright

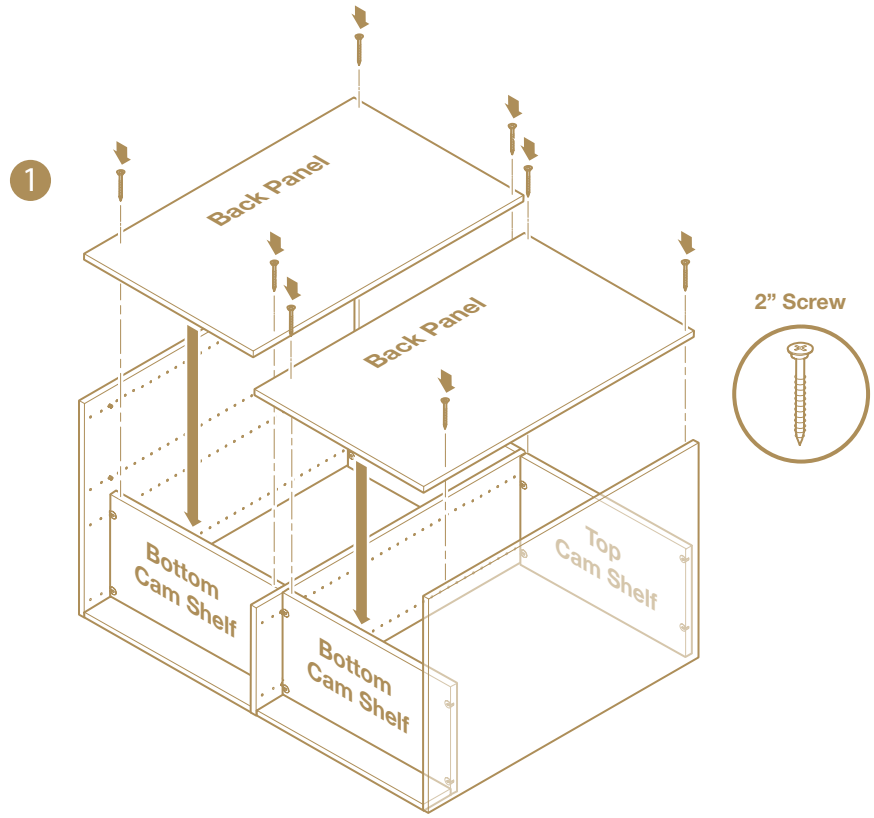

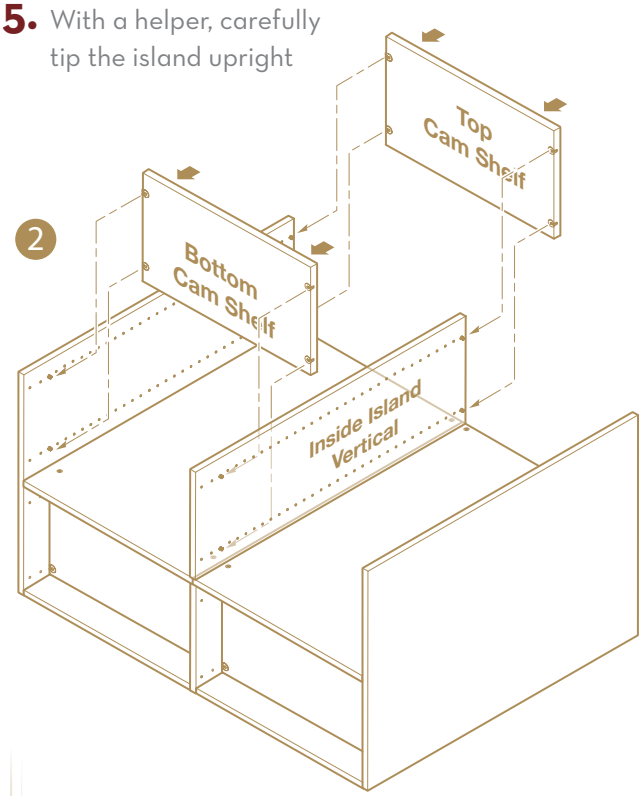

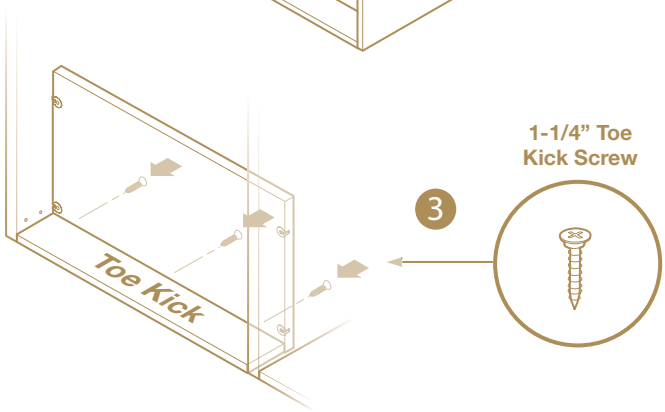

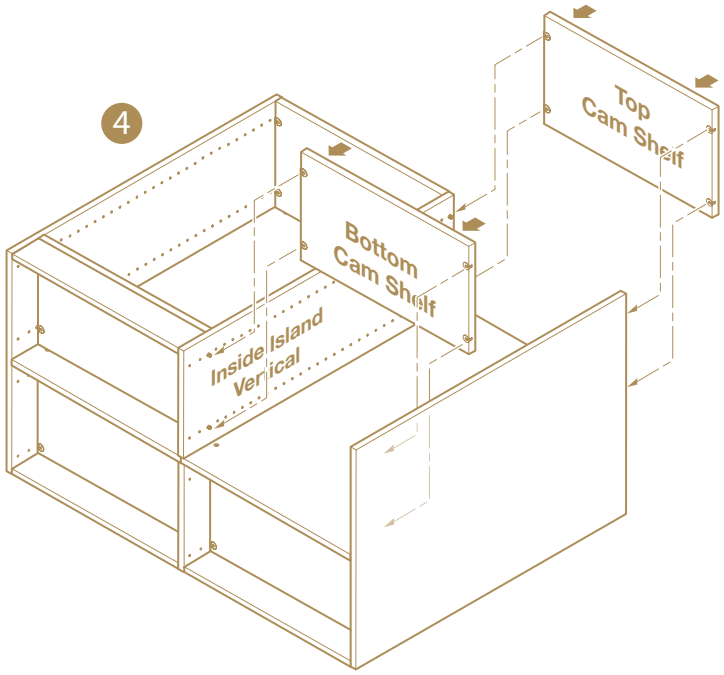

INSTALLING TOPS

Tops may be installed in a variety of ways.

IMPORTANT: Do not overload unit. If any shelf, top, or bottom of unit bows or bends greater than 1/2", it is overloaded. The shelf, top, or bottom could collapse and cause serious bodily injury and/or damage to personal belongings.

OPTION 1: SCREW THE TOP IN PLACE

1. Drill 3/16" diameter holes in the top cam shelves over which the counter top or bench will be placed.
2. Position the top and fix in place with clamps, weights or tape, or have a helper hold it.
3. Drive 1-1/4" screws through the cam shelves from beneath into the underside of the top.

CAUTION: Do not drive the screws through the top surface of the counter top or bench top.

NOTE: The screws will draw the top tight to the cam shelves.

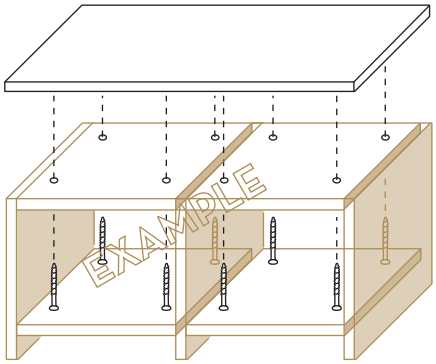

OPTION 2: ADHERE THE TOP CAM SHELVES WITH CAULKING OR ADHESIVE (WHICH YOU PROVIDE):

IMPORTANT: Follow manufacturer's instructions on caulk or adhesive product.

1. Lay squiggly lines or dots of caulking or adhesive on the top cam shelves around the perimeter and remaining surface so that no area greater than one square foot is without some caulking or adhesive.

   NOTE: It is not necessary to apply large amounts of caulking or adhesive.
2. Position the top and fix in place with clamps, weights or tape.

IMPORTANT: Check to ensure that top does not move or slide out of position when clamping, weighting or taping in place.

3. Remove clamps, weights or tape after the caulk or adhesive has set.

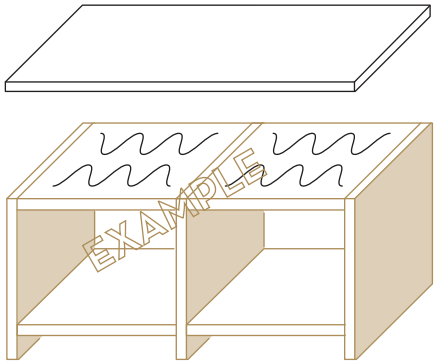

ASSEMBLE DRAWER WITH FULL-EXTENSION GLIDES

Drawer boxes and drawer fronts are packed separately. Drawer pulls, glides and screws are found in your hardware box. Orders with more than five drawers may have a separate box of glides.

NOTE: The glides consist of drawer box sections and unit panel sections. Separate them by sliding the plastic lever and pulling apart.

1. Separate the drawer box section by holding the black lever up (1a) and extend out (1b).
2. **Locate and align.** Align the closed end of the drawer box glide flush with the front edge of the drawer box. The side of the drawer box includes dimples to help you align the glide location top to bottom. When the glide is in the proper installation location, the dimples will be visible through the holes in the glide.
3. **Attach.** Attach glide to the drawer box using three (3) #6 x 5/8" screws on each side. Install a screw through the glide hole and into the dimple closest to the front of the drawer box first, then into the dimple closest to the back of the box next, and finally into any slide hole near the middle of the box last.
4. **Attach handle/knob.** Using screws paired with handle or knob, attach to drawer front tightly though holes.
5. **Attaching drawer fronts.** Using two (2) drawer front screws, attach front to box. Do not fully tighten. Use hand screwdriver only.

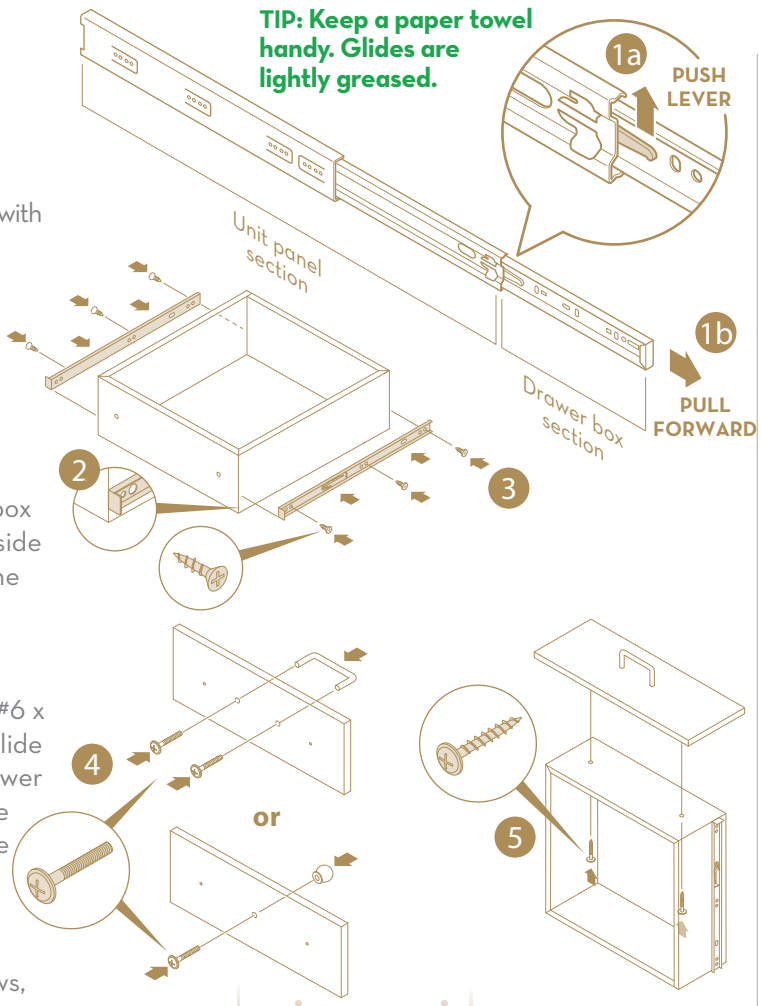

ATTACH FULL-EXTENSION GLIDES TO VERTICAL PANELS

While many components can be positioned according to your preference, drawer locations are often strictly determined by the design. Follow the guidelines in the nearby illustration to install the unit section of the glides, **beginning with the glides for the bottom drawer.**

Glides for the bottom drawer are installed in the **2nd open hole above** the cam shelf.

Glides for 12.5" drawers have **9 open holes** above before the next set of glides.

Glides for 12" drawers have **8 open holes** above before the next set of glides.

Glides for 8" drawers have **5 open holes** above before the next set of glides.

Glides for 5" drawers have **3 open holes** above before the next set of glides.

Cam shelf above top drawer is installed **one hole lower** than if it were another set of glides.

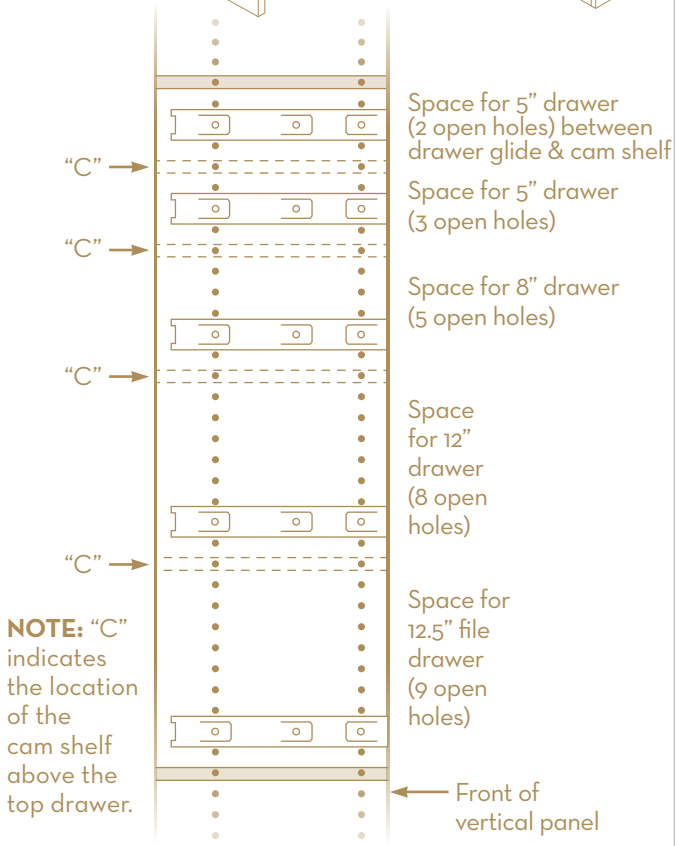

Attach drawer glide unit panel sections to vertical panels using Euro screws.

INSTALL DRAWERS

1. To install drawers, move drawers into position so that the glide sections on the drawer box are aligned with the glide sections on the unit.

TIP: When installing, you can pull the unit glides out to better align the sections.

2. After positioning the drawers, hold them level, and slide them into the unit.

3. **NOTE: You will experience some resistance when closing the drawers for the first time. They will operate smoothly afterwards.**

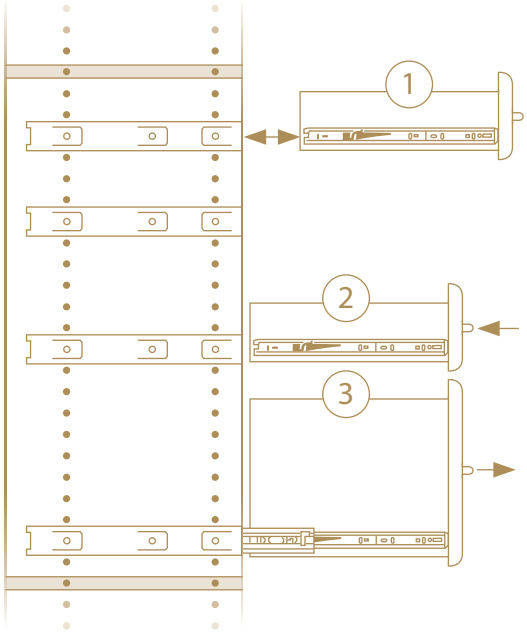

ADJUST DRAWERS

Oversized drawer box mounting holes allow the drawer front to be adjusted upwards, downwards, sideways and even rotated.

Loosen the drawer front adjuster screws and adjust the top drawer front so that it is parallel to the top cam shelf. Once aligned, fully tighten the drawer front adjuster screws..

IMPORTANT: Never use a power drill to tighten drawer front screws! Always use a manual screwdriver.

For any drawers below, adjust the lower fronts so that the gaps between drawers are uniform across the width of the fronts – approximately 1/8".

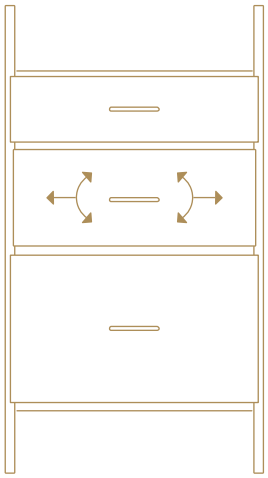

ASSEMBLE DRAWER WITH SOFT CLOSE GLIDES

Drawer boxes and drawer fronts are packed separately. Drawer pulls, glides and screws are found in your hardware box. Orders with more than five drawers may have a separate box of glides.

NOTE: The glides consist of drawer box sections and unit panel sections. Separate them by sliding the plastic lever and pulling apart.

1. Separate the drawer box section by holding the black lever up (1a) and extend out (1b).
2. **Locate and align.** Align the closed end of the drawer box glide flush with the front edge of the drawer box. The side of the drawer box includes dimples to help you align the glide location top to bottom. When the glide is in the proper installation location, the dimples will be visible through the holes in the glide.
3. **Attach.** Attach glide to the drawer box using three (3) #6 x 5/8" screws on each side. Install a screw through the glide hole and into the dimple closest to the front of the drawer box first, then into the dimple closest to the back of the box next, and finally into any slide hole near the middle of the box last.
4. **Attach handle/knob.** Using screws paired with handle or knob, attach to drawer front tightly though holes.
5. **Attaching drawer fronts.** Using two (2) drawer front screws, attach front to box. Do not fully tighten. Use hand screwdriver only.

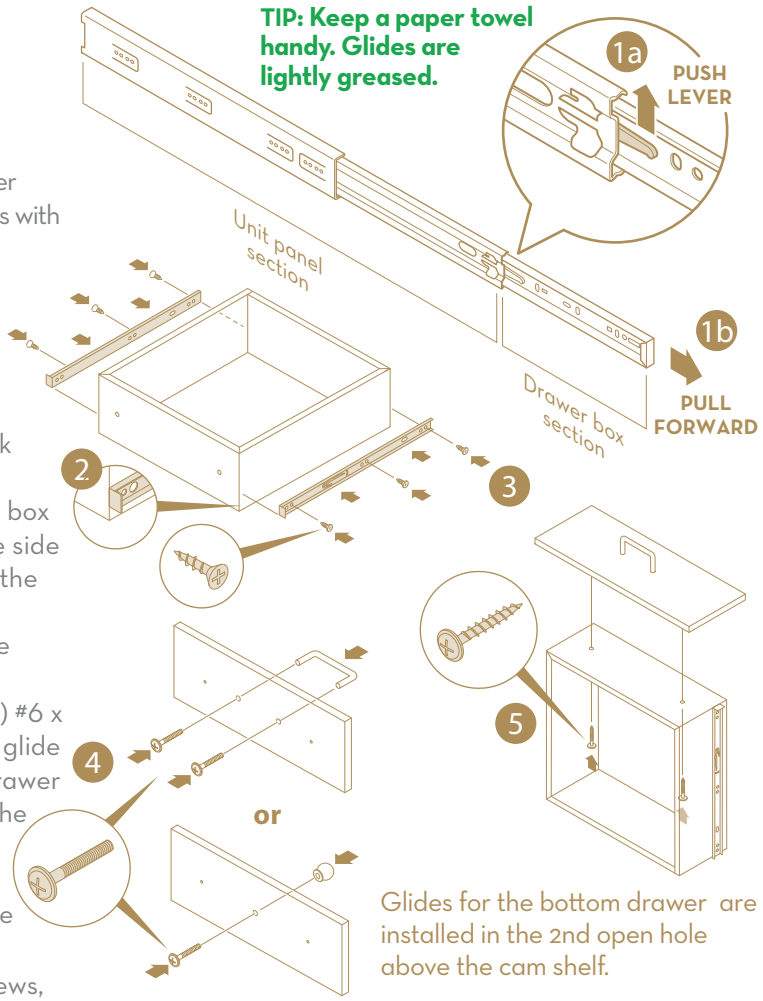

Glides for the bottom drawer are installed in the 2nd open hole above the cam shelf.

Cam shelf above top drawer is installed one hole lower than if it were another set of glides.

ATTACH SOFT CLOSE GLIDES TO VERTICAL PANELS

While many components can be positioned according to your preference, drawer locations are often strictly determined by the design. Follow the guidelines in the nearby illustration to install the unit section of the glides, **beginning with the glides for the bottom drawer.**

Attach drawer glide unit panel sections to vertical panels using Euro screws and (#6) 5/8" screws.

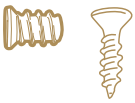

Full Extension Glide-Soft Close

1. Install Euro screw into front panel hole.
2. Level or use square to position slide on vertical.
3. Use (#6) 5/8" screw.

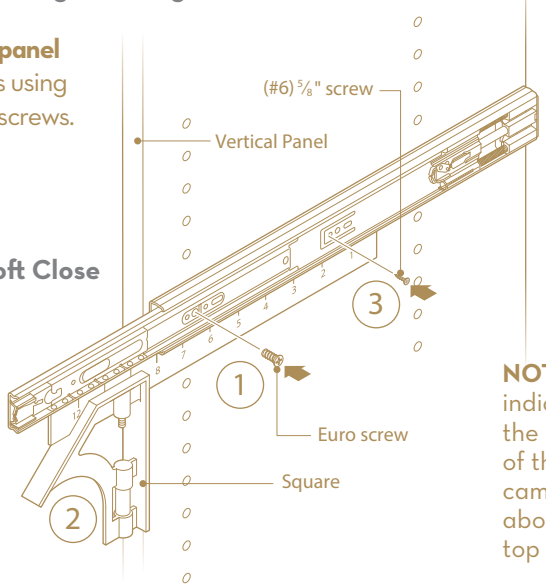

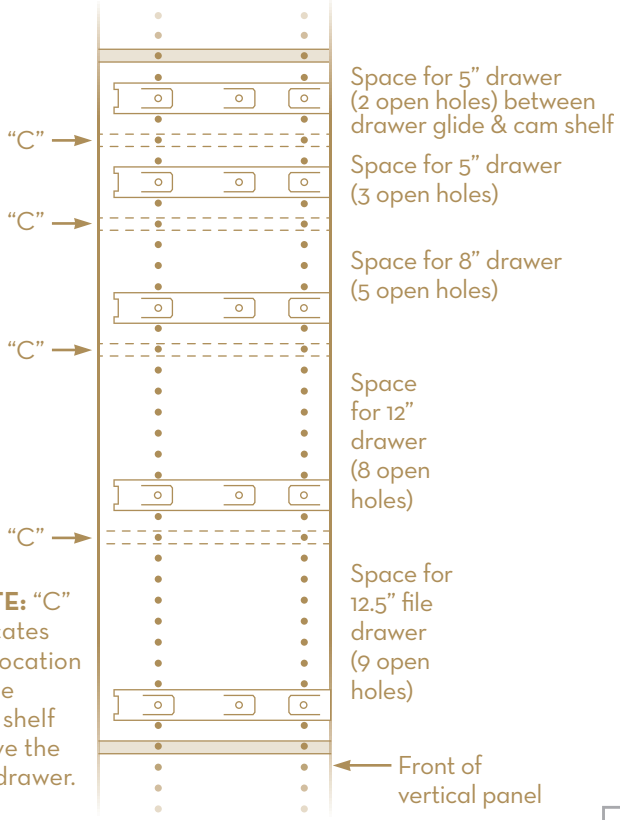

NOTE: "C" indicates the location of the cam shelf above the top drawer.

INSTALL DRAWERS

1. To install drawers, move drawers into position so that the glide sections on the drawer box are aligned with the glide sections on the unit.

TIP: When installing, you can pull the unit glides out to better align the sections.

2. After positioning the drawers, hold them level, and slide them into the unit.

3. **NOTE: You will experience some resistance when closing the drawers for the first time. They will operate smoothly afterwards.**

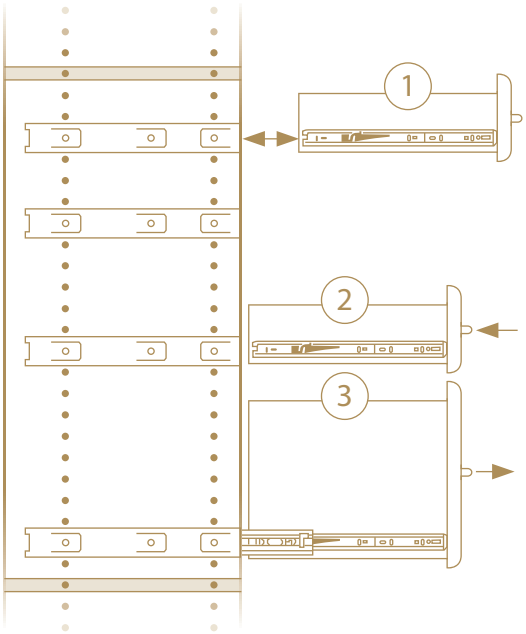

ADJUST DRAWERS

Oversized drawer box mounting holes allow the drawer front to be adjusted upwards, downwards, sideways and even rotated.

Loosen the drawer front adjuster screws and adjust the top drawer front so that it is parallel to the top cam shelf. Once aligned, fully tighten the drawer front adjuster screws..

IMPORTANT: Never use a power drill to tighten drawer front screws! Always use a manual screwdriver.

For any drawers below, adjust the lower front so that the gaps between drawers are uniform across the width of the fronts – approximately 1/8".

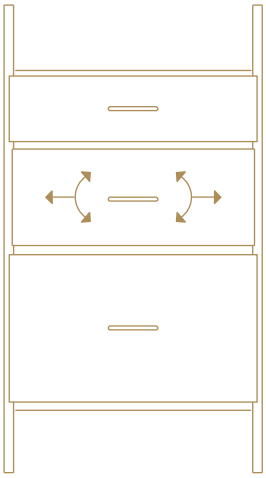

DRAWER LOCK

A locking drawer comes with:

- pre-drilled drawer face,
- pre-notched drawer box,
- cylinder lock
- and specially slotted cam shelf with lock groove

IMPORTANT: Install the slotted cam shelf directly above the locking drawer, leaving

- 2 open holes above the glides for a 5" locking drawer,
- 4 open holes above the glides for an 8" locking drawer,
- 7 open holes above the glides for a 12" locking drawer.

Assemble and install the lock following the illustration. Use the offset cam plate as shown in illustration not the straight one

Exploded View

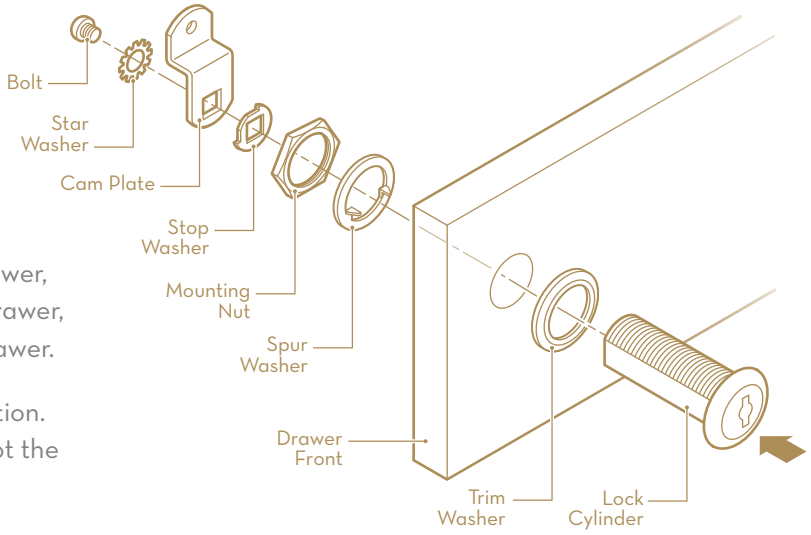

Side View Installed

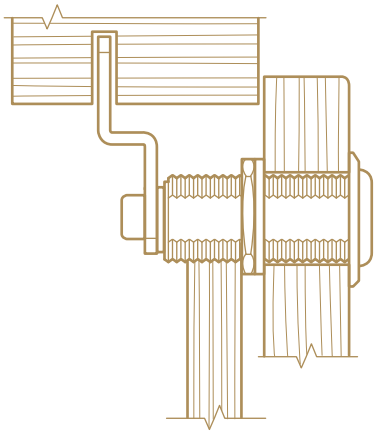

BASKETS

TO ATTACH FULL-EXTENSION GLIDES (STEEL):

1. The first step in attaching your full-extension glides is disassembling the glide. To disassemble the glide, first fully extend the glide. Then press the black plastic tab between the arrows with your thumb, and pull the smallest section completely out.

2. Install smaller glide section onto vertical panel with the closed end toward wall. The black release tab is towards the front of the glide section. Set the glide 7/8" back from the front of the vertical panel and attach the glide using two Euro screws in the pre-drilled holes.

NOTE: Basket glides are compatible with the pre-drilled holes in 14" vertical panels only. For other depths, you are required to drill at least the rear mounting holes for the basket glides in the vertical panels.

3. Hook glide onto basket. Hook the large glide section onto the basket with the bumper towards the front.

4. Insert basket. Insert basket section into the installed glides on the verticals.

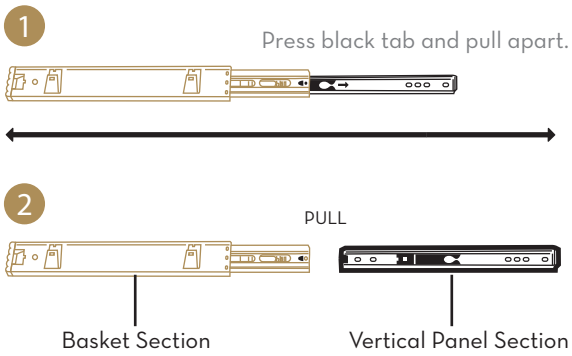

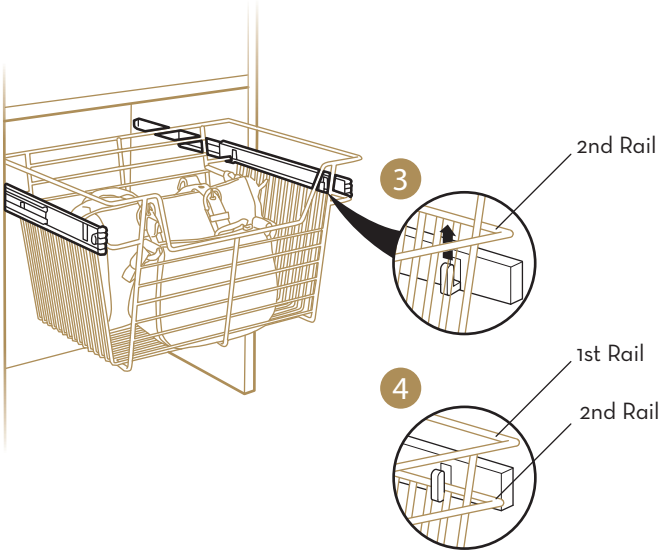

ADDITIONAL GUIDELINES FOR BASKETS:

Baskets may be installed according to your preferences with regard to height and spacing. However, we can offer the following guidelines:

1. If a basket is installed just below a cam shelf, allow at least 2 open holes between the basket glide and the cam shelf.

2. If a basket is installed directly over the floor or a cam shelf,
- allow at least 16 3/8" or 12 open holes below the center of glide for a 17" basket
- allow at least 10 1/8" or 7 open holes below the center of glide for an 11" basket
- allow at least 3 3/4" or 2 open holes below the center of glide for a 6" basket

3. If a basket is installed directly over another basket,
- allow at least 15 open holes between glides for a 17" basket
- allow at least 9 open holes between glides for an 11" basket
- allow at least 5 open holes between glides for a 6" basket

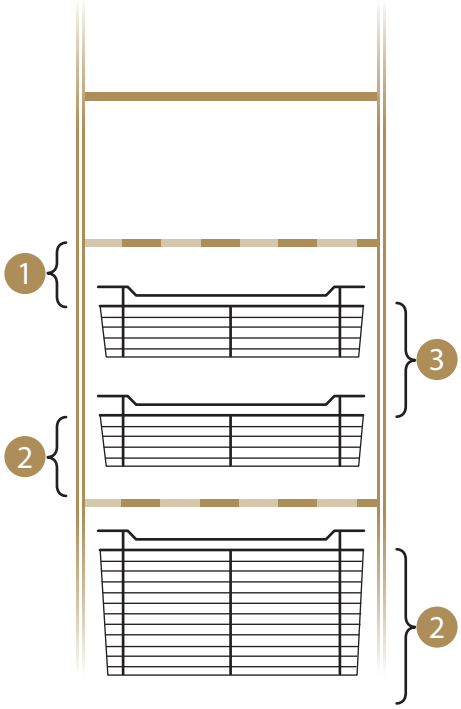

HAMPERS

1. Install cam bolts:

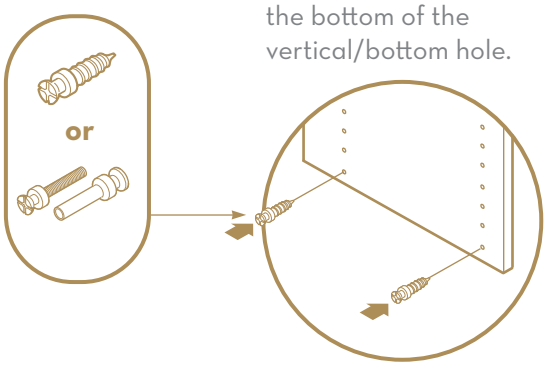

Wall Mounted-Install at the bottom of the vertical/bottom hole.

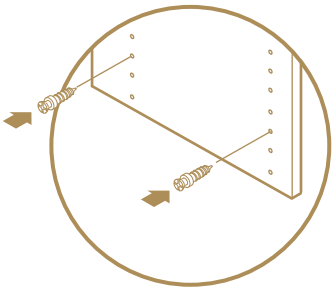

Floor Mounted with Short Toe-Leave two (2) holes open

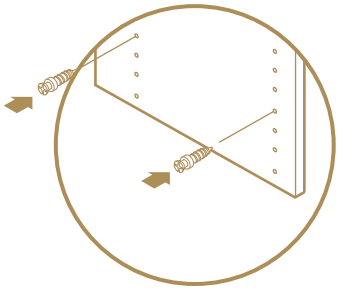

Floor Mounted with Tall Toe-Leave three (3) holes open

2. Install cam shelf above hamper. Leave 17 holes open and write "C" at the 18th hole (2a). If no drawers are present, install cam bolts at "C" location (2b). If drawers will be installed above hamper, insert cambolt at location per drawer size (2c).

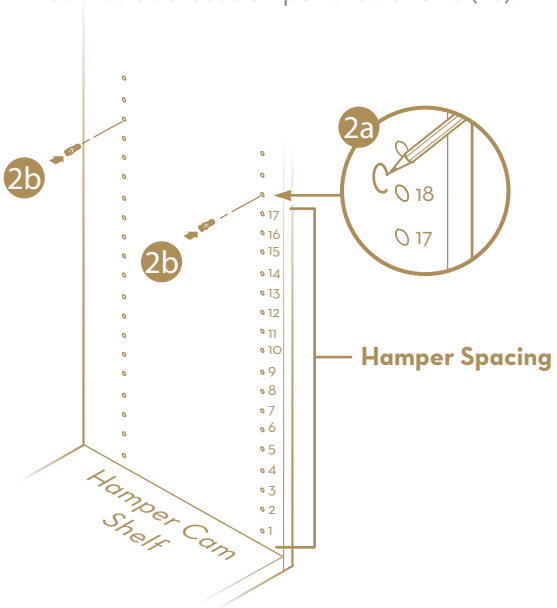

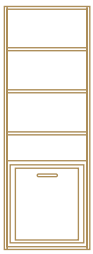

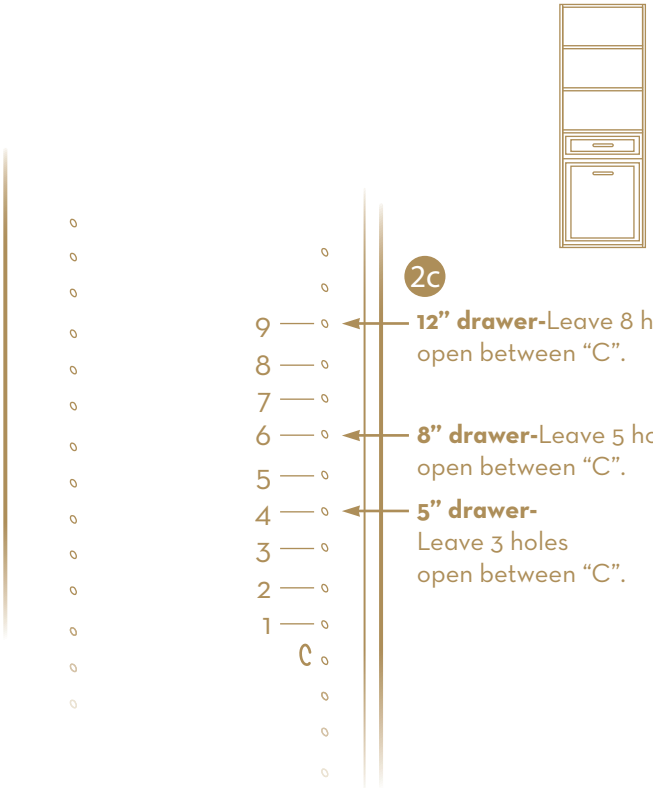

3. Install the handle or knob as per your design.
NOTE: Do not use power driver.

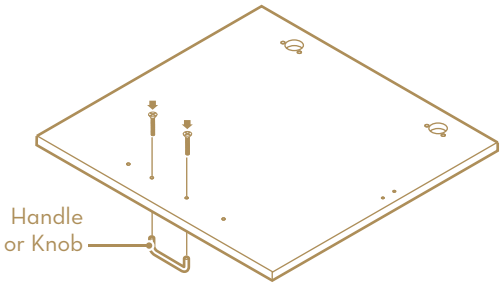

4. Install basket mount bracket as shown.

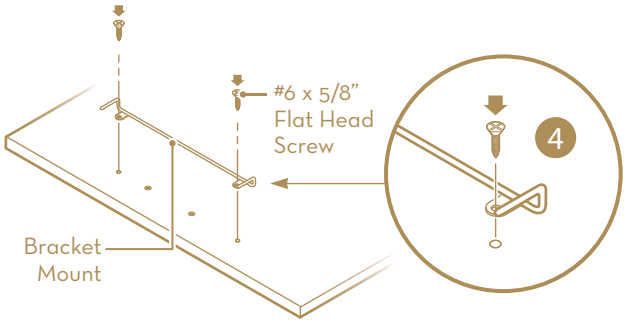

HAMPERS (continued)

5. Install lid stay with screws.

6. Assemble hinge to hinge plate.

7. Attach full hinge into hamper face with two (2) #6 x 5/8" flat head screws.

8. While holding the hamper door flat, attach hinges to hamper cam shelf using pre-drilled holes.

9. Attach lid stay to vertical. Lid stay is attached on the verticle with Euro Screws into the 10th and 11th pre-drilled holes above the bottom hamper cam shelf.

10. Adjust thumb screw on lid stay to create a "soft stop".

11. Install laundrybasket.

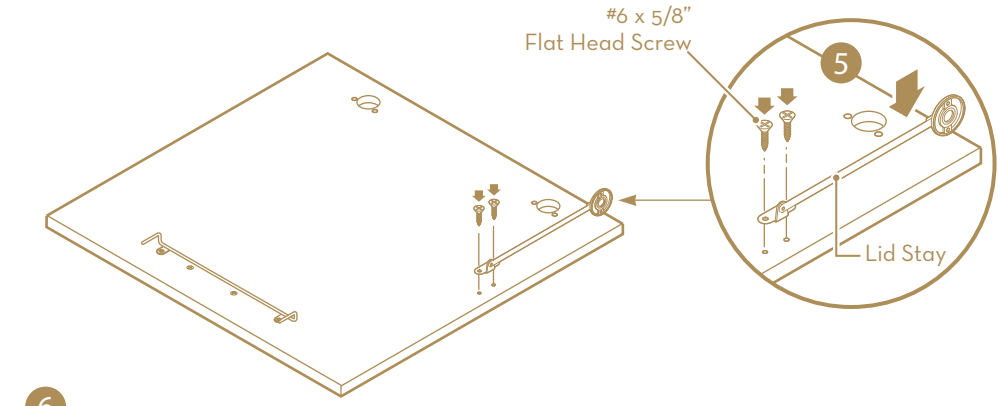

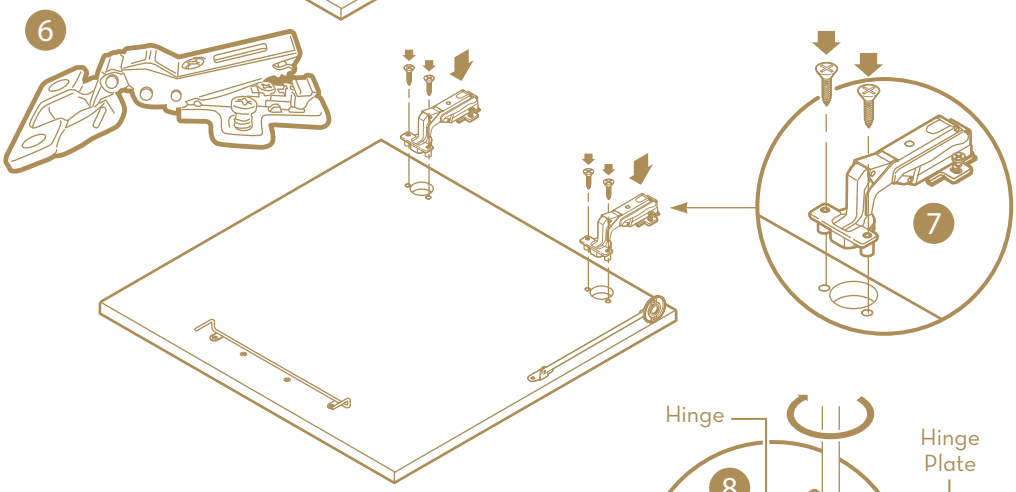

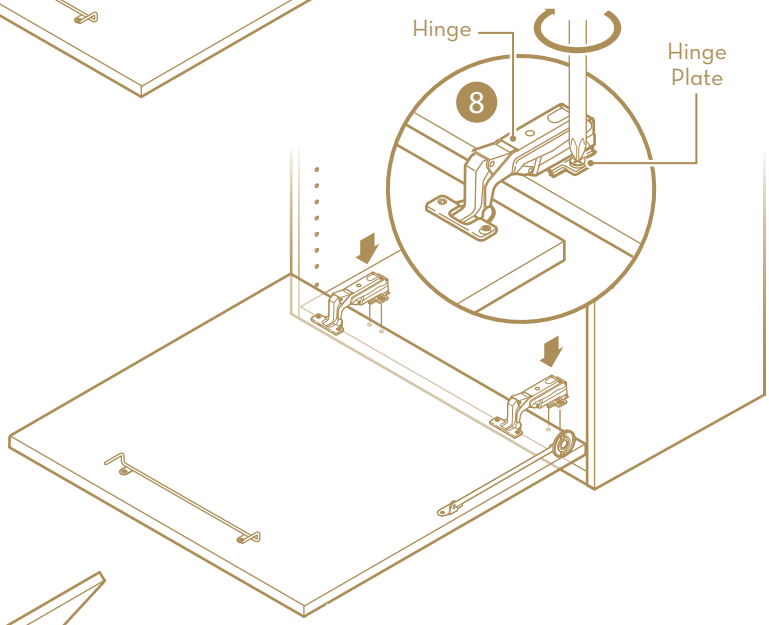

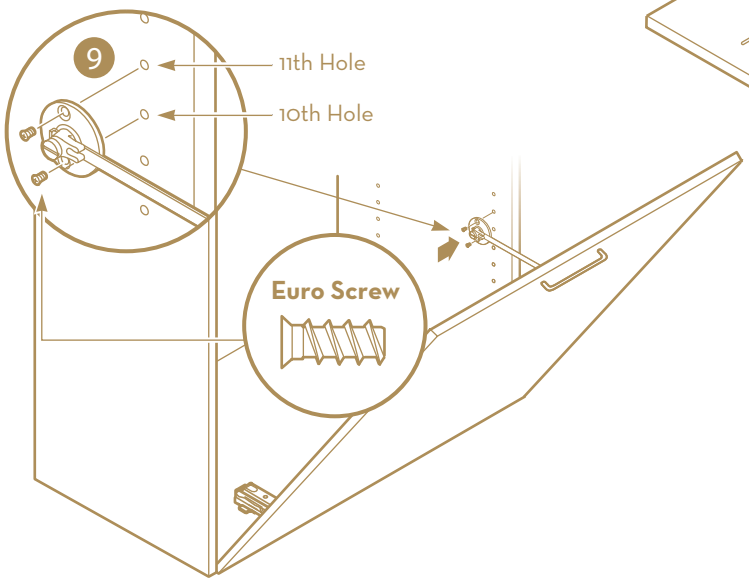

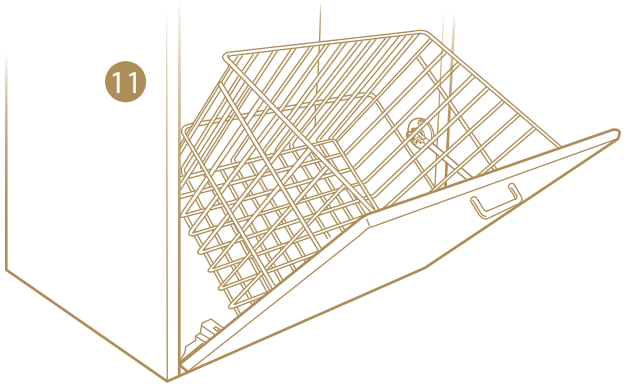

SLANTED SHOE SHELVES

TO ATTACH SLANTED SHOE SHELVES:

1. Hang the vertical panels and install the top flat cam shelf.

2. Insert fences into the shelves. Insert the fences into the pre-drilled holes in the front of the slanted shoe shelves. The vertical bars in the fence face the interior of the shelf.

DO NOT use a mallet or a hammer to pound the fence into the shelves. Fences cannot be removed, once installed.

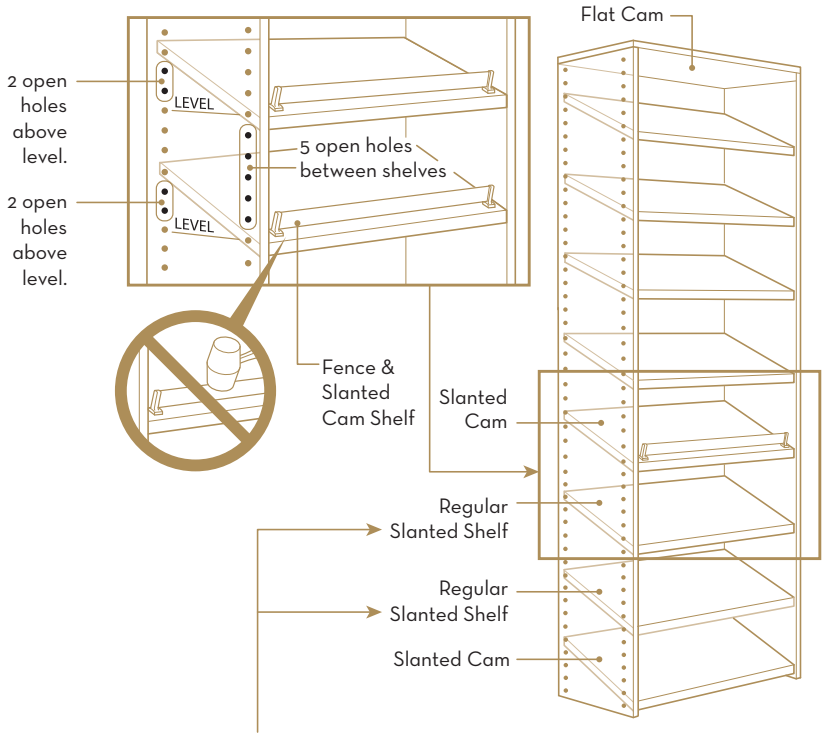

IF CAMMED SLANTED SHOE SHELVES ARE INCLUDED:

3. Install bottom cam shelf. For the lowest slanted shoe shelf, install a slanted bottom cam shelf with the front cams in the 2nd hole from the bottom and the back cams in the 5th hole from the bottom.

NOTE: Regular Slanted Shoe Shelves are pre-drilled with 12mm holes underneath in the front that set down onto the regular shelf pins. The back of the shelf sits on top of the regular shelf pins. Four regular shelf pins are included for each regular slanted shoe shelf.

Information for all Depths	
Depth	Open Holes Above Level
14"	2
19"	3
24"	5

4. Install middle slanted cam shelf. For a typical full slanted shoe shelf installation, as shown above, install middle slanted cam shelf at the midpoint of the vertical. Refer to illustration above to establish the proper slope.

5. Install adjustable slanted shelves. Leaving 5 open holes between adjustable slanted shoe shelves, insert four shelf pins with the rear of the shelf raised to the 3rd hole above level.

ADJUSTABLE SHOE ORGANIZER™ SHELVES

1. Install shoe shelf pins. Insert four (4) shoe shelf pins into holes in verticals so the steel shelf will be flat.

2. Install steel shelf. Align the shelf notches with the four shoe shelf pins and lower into place.

3. Confirm. Make sure the steel shelf is flat and seated into place.

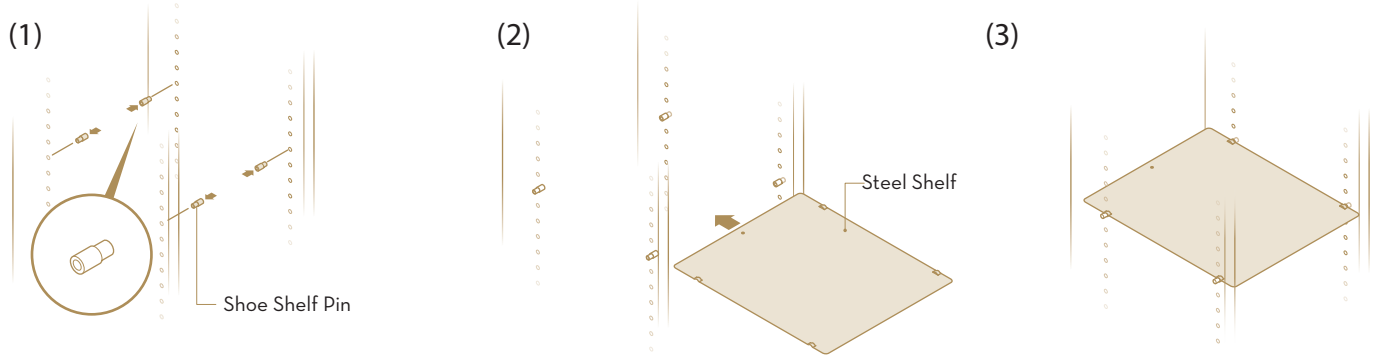

SHELF-MOUNTED IRONING BOARD

INSTALL IRONING BOARD CAM SHELF:

In most designs, the ironing board will be installed at the top of a stack of drawers. If so, skip to Step 2. Please note that the ironing surface will be 4" higher than the cam shelf to which it is mounted. If the location is not predetermined, proceed as follows:

1. **Calculate Height:** Determine the desired height of the ironing surface and subtract 4".

Install Cam Shelf: Install the ironing board cam shelf in the pre-drilled vertical panel holes nearest to the height calculated as measured from the floor.

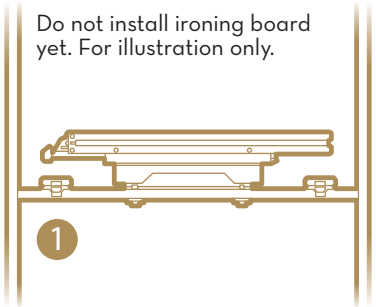

ANCHOR CAM SHELF:

IMPORTANT: Before mounting the Ironfix Shelf-Mounted Ironing Board, you must have installed your organization system correctly. In addition to the steel rail and any required support cleats, you must secure the section containing the ironing board to the wall with an L-bracket.

2. **Position the L-Bracket:**
Position the L-bracket against the wall and the cam shelf. The L-bracket may be installed either above or below the ironing board cam shelf.

Attach the L-Bracket:
Attach the L-bracket to the shelf with 5/8" screws. Secure the L-bracket to the wall with a 2" screw into a stud or a Toggle.

REINFORCE CAM SHELF:

3. **Install Top Angle Brackets:** Install two angle brackets on the top and to the rear of the ironing board cam shelf with 5/8" screws as shown in the figure (3a).

Install Bottom Angle Brackets: Install four angle brackets on the bottom of the ironing board cam shelf with 5/8" screws, two just behind the front cam fittings and two just in front of the rear cam fittings as shown (3b).

INSTALL SECOND CAM SHELF:

4. Install a standard cam shelf above the ironing board cam shelf, leaving five open holes between the two shelves.

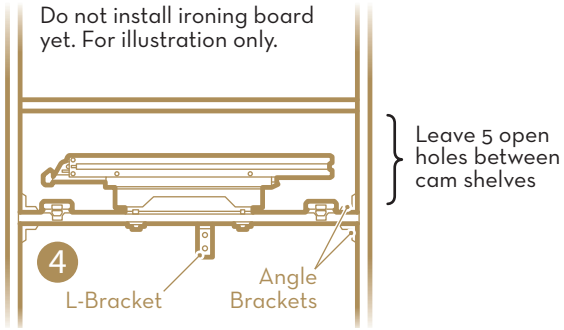

INSTALL IRONING BOARD:

5. **Position Ironfix:** Place the Ironfix Shelf-Mounted Ironing Board with the logo to the front on the pre-drilled cam shelf, and align the four mounting holes on the Ironfix to those on the shelf.

Attach Ironfix: Attach Ironfix to shelf with four M6 bolts inserted through shelf from below.

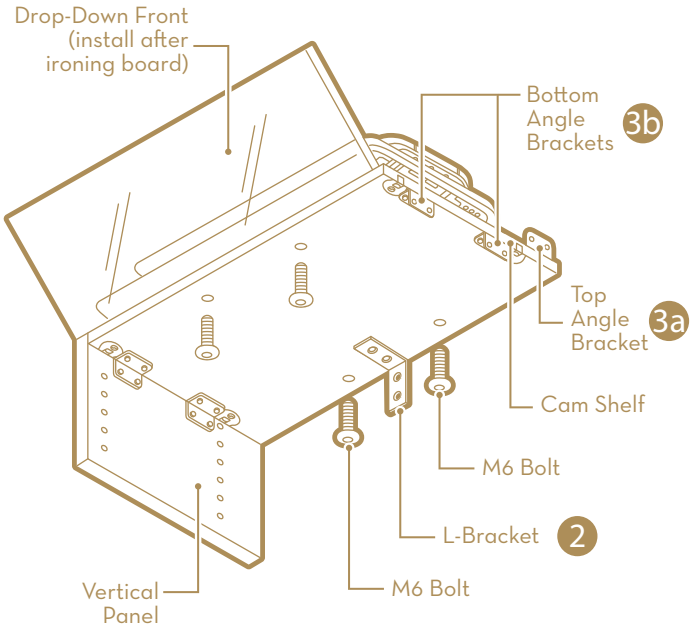

SHELF-MOUNTED IRONING BOARD

ATTACH DROP-DOWN FRONT:

1. Assemble hinges: Insert notch over hinge pin (1a) and pivot top section down and push onto lever to snap together (1b).

2. Attach Hinges to Drop-Down Front. Position hinges square to the edge of the drop-down front, and secure each hinge with two 5/8" screws. See figure.

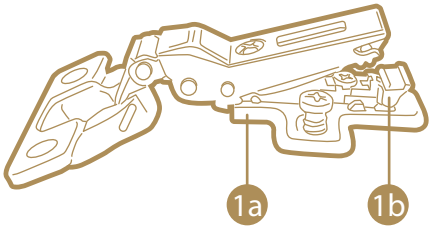

3. Attach Drop-Down Front. Position drop-down front so that hinges align with pre-drilled holes in cam shelf. Using a Phillips screwdriver, drive the four hinge screws into the cam shelf.

4. Attach Pull. Attach handle or knob to the drop-down front with the screw(s) provided.

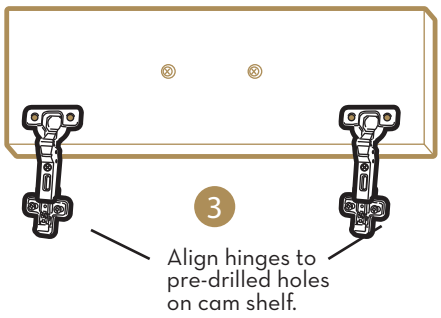

5. Adjust Hinges. The drop-down front may be adjusted sideways by loosening the shelf plate mounting screws and sliding the shelf plate. Retighten the mounting screws in the desired position. Additional adjustments are possible by turning the hinge adjuster screws as described in the figure.

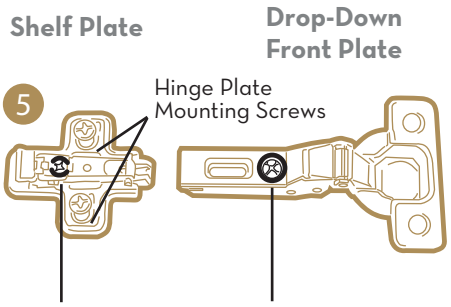

Turn hinge plate adjuster screw to move drop-down front in or out.

Turn drop-down front plate adjuster screw to move drop-down front up or down.

TO USE THE IRONFIX SHELF-MOUNTED IRONING BOARD:

1. Slide Out the Ironfix. After opening the drop-down front, grasp the base and pull the Ironfix straight out.

2. Open the Ironfix. Lift the tapered end of the ironing board, opening the Ironfix like a book.

3. Rotate to the Desired Position. Rotate the board to any of the seven pre-set positions.

4. Store the Ironfix. Reverse steps 1 – 3 to store the Ironfix.

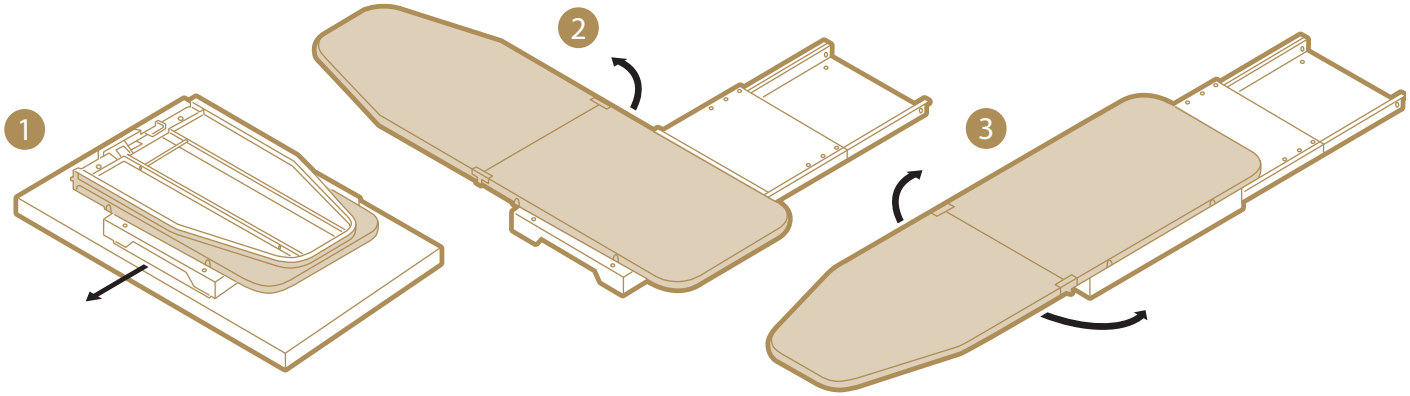

CONNECTING SHELVES IN CORNERS

CONNECTOR BRACKET SYSTEM (TOP SHELVES ONLY)

The Connector Bracket System is used to join top shelves at a 90 degree angle. The Connector Cam Shelf, which is half-cammed, bridges the gap between the two adjacent shelf units. **(See Figure 1.)** Job site situation may require shelf trimming. Hold shelf in place, scribe length with pencil, cut to size.

TO INSTALL CONNECTOR BRACKET SYSTEM:

1. **Attach Connector Brackets:** On the top non-cammed side of the shelf, use two (#6) 5/8" screws to attach connector brackets with a half overlap, approximately 2" from the front and back edge.
2. **Check Double Cam Screws:** Make sure that double cam screws are installed in the top set of holes of the side vertical panel. **You may be required to drill through the top holes if the end panel is finished.**
3. **Install Connector Cam Shelf:** Install the Connector Cam Shelf as shown in the diagram above. After locking the cams, make sure that the non-cammed side is flush with the receptor unit's top shelf. Secure the Connector Brackets using two (#6) 5/8" screws.

Figure 1.

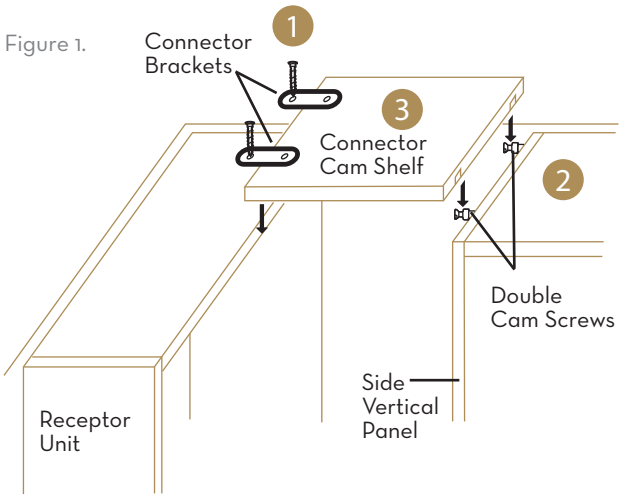

H-CHANNEL SYSTEM

The H-Channel System is used to join shelves at a 90 degree angle. These half-cam and regular shelves bridge the gap between the two adjacent shelf units. These shelves are usually 3/16" shorter than the width of the gap. **(See Figure 2.)**

TO INSTALL H-CHANNEL:

1. **Install H-Channel to Receptor Unit:** Install the H-Channel onto the front of the Receptor Unit cam shelf, as shown above. If necessary, trim length using a hacksaw.
2. **Install Double Cam Screws:** Screw double cam screws into the side vertical in the top set of holes. **You may be required to drill through the top holes if the end panel is finished.**
3. **Slide Half-Cam into H-Channel:** Slide the Half-Cam Shelf into the H-Channel and support the opposite side by locking into the cam fittings. Repeat steps 1 to 3 for additional shelves.
4. **Install Corner Brackets:** Install Corner Brackets against the 90 degree corner of the half-cam and receptor cam shelves by using two (#6) 5/8" screws, as shown above. Snap the flap shut.

Figure 2.

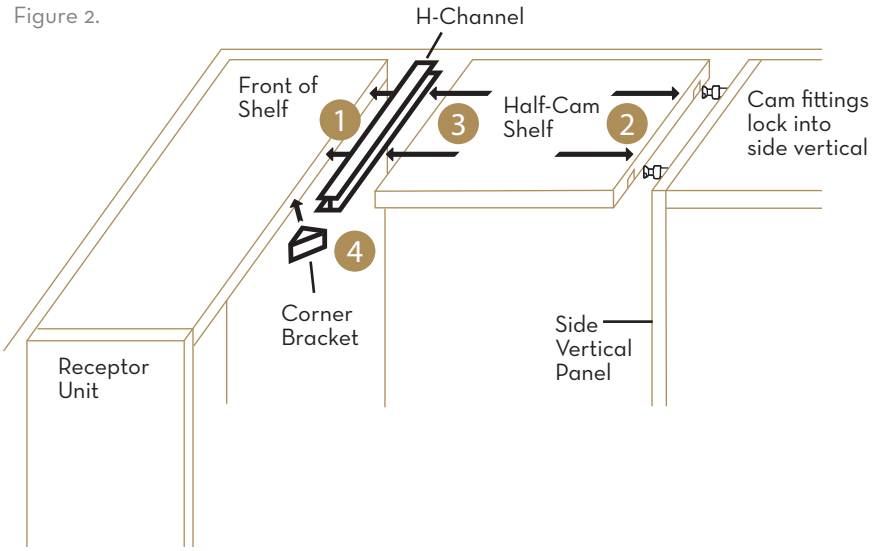

INSIDE & OUTSIDE CORNER SHELVES

NOTE: Install the inside radius corner shelf section before adjacent sections.

INSIDE RADIUS CORNER SHELVES

1. **Layout rail:** Run right wall rail into corner. Stop left wall rail at least 15" short of the corner. It is best to have the end of the left wall rail anchored in a stud. See figure 1.

2. **Hang vertical panels:** Hang the inside and two outside verticals 24"from the corner for 24" corner shelves and 30" from the corner for 30" corner shelves. See figure 2.

   TIP: Install top cam screws before hanging panels, using single cam screws for the "inside" panel and double cam screws for the "outside" panels, if there are adjacent sections.

3. **Install cam screws:** After hanging panels, layout the positions for the middle cam shelf and regular shelves using one shelf pin for each shelf in position #3 or #4. See figure 2. When satisfied, install all cam screws for the middle and bottom cam shelves.

4. **Install cam shelves:** Install the top cam shelf first, followed by the middle and bottom cam shelves. Lower each cam shelf onto its cam screws. Lock each cam fitting with one-quarter turn clockwise using a #2 Phillips screwdriver.

   TIP: Angle the shelves when installing, to make it easier to clear the installed cam screws.

5. **Insert shelf pins:** Insert five shelf pins for each shelf, leaving position #1 empty. See figure 2.

6. **Install regular shelves:** Angling each shelf, lift it above, then lower it onto its shelf pins, #2 thru #6. Finally, lift shelf slightly to insert shelf pin #1.

Figure 1.

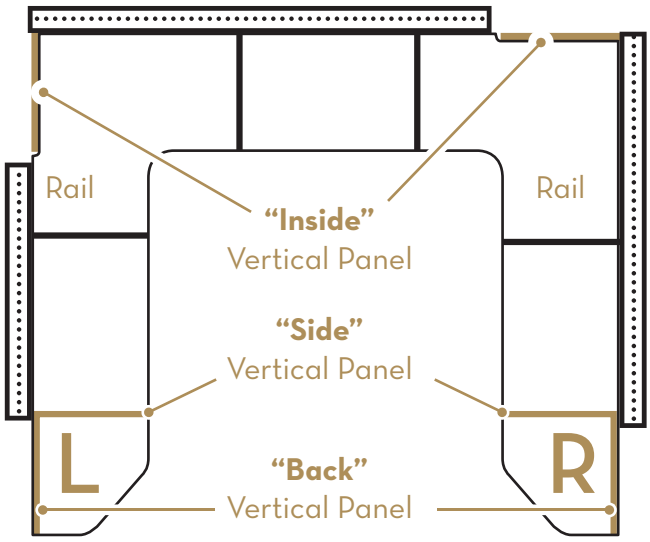

Figure 2.

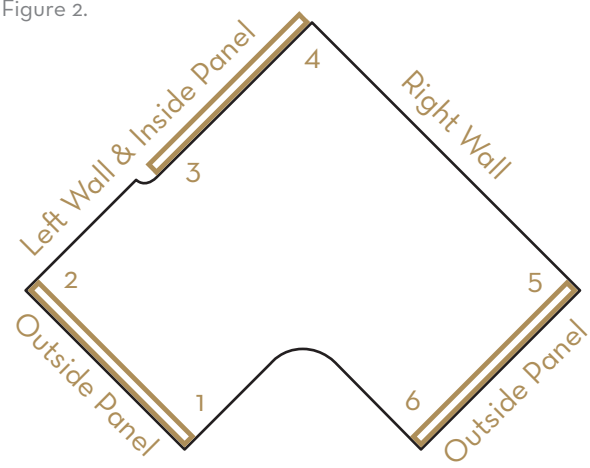

OUTSIDE CORNER SHELVES

IMPORTANT: The steel rail must not extend beyond side vertical panel into space for back vertical panel.

1. **Mount Back Vertical Panel:** Mount back vertical panel against the back wall and flush perpendicular to side vertical panel.

   Option A: Anchor to stud with three rail screws, one at the top, one at the middle and one at the bottom of the vertical. To do this, locate the stud and mark its corresponding position on the "back panel". Drill 3/16" holes in the vertical panel at the intersections of the stud line and where cam shelves will cover screws. Hold "back panel" in position and drive screws into stud until they are flush or slightly countersunk.

   Option B: Anchor to wall with toggle bolts. Install toggle bolts through pre-drilled vertical panel holes in locations other than where corner shelves will be positioned. Make sure the toggle bolts are tight!

2. **Install Corner Shelves:** Using single cam screws on the back vertical and single/double cam screws on the side vertical, install corner cam shelves. If corner shelves do not drawer tight to the vertical panels, then side and back panels are not perpendicular. In this case, loosen back panel anchor screws until corner shelves can be locked in place. Then insert shims near anchor screws and retighten.

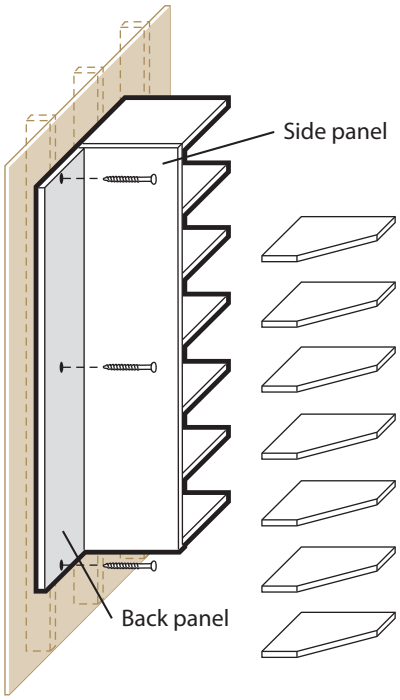

NOTE: Pre-drilled holes not shown.

DOORS

The doors are half overlay doors with European hinges. All doors are pre-drilled to receive the door hinges. We do not pre-drill for handles since handle location is based on personal preference.

ASSEMBLING HINGES & INSTALLING DOORS:

1. **Assemble hinges:**
   Insert notch over hinge pin (1a) and pivot top section down and push onto lever to snap together (1b).

2. **Position door plate onto back of door.**
   Make sure that the hinge is square to the edge of the door and not crooked.

3. **Use two (#6) 5/8" screws to attach.**

4. **Position the door.** Hold door against unit and position it so that the top and bottom cam shelves are partly covered by the door.

5. **Attach unit plate.** Screw the pre-installed hinge screws on the Unit Plate into the closest pre-drilled holes at the front of the vertical.

INSTALLING THE HANDLES:

Determine door pull locations according to your preference, using other cabinetry in your home as a guide. If you have several pulls to install, consider making a template. Pre-drill the handle or knob hole(s) from the front side of the door using a 5mm or 3/16" drill bit. We recommend this drilling direction to avoid the drill bit from chipping out the material on the front side of the door. Clamp or hold a scrap board on the back of the door to minimize chip out when the drill bit breaks through. For handles, drill the holes 128mm on center.

NOTE: All custom doors will arrive 2-3 weeks after your order.

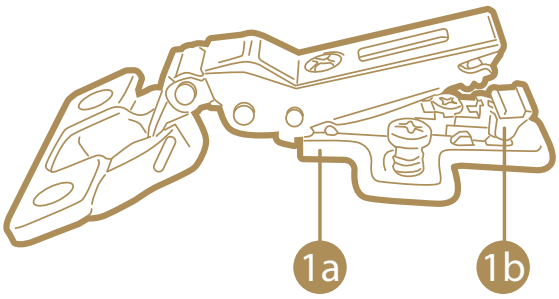

Adjusting Hinges:
The hinges can be adjusted slightly using screws A & B as noted in **Figure 1.**

Figure 1.

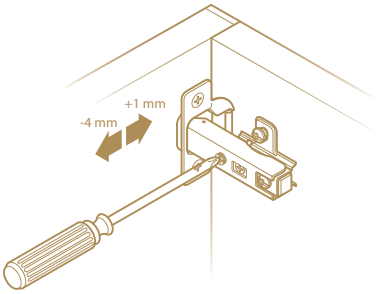

Horizontal
By screw adjustment (5 mm of adjustment)

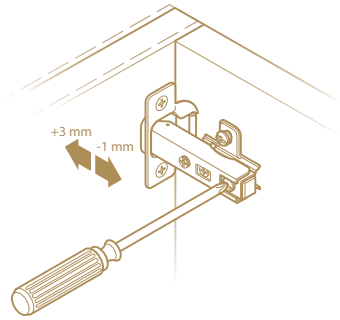

In-and-Out
by loosening the hinge-arm mounting screw

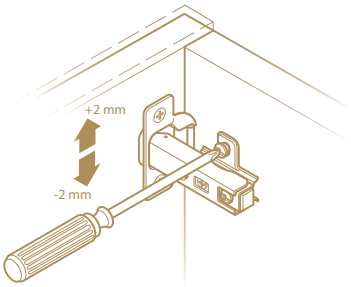

Vertical
via slots in the mounting plate or via cam adjustment (+/-2 mm of adjustment

CROWN MOLDING

TO INSTALL YOUR CROWN MOLDING:

1. **Install Half-Cam Shelves:** Install half-cam shelves to connect the top shelves of each unit.
2. **Determine Placement of Crown:** Determine placement of crown by marking the 1-1/2" setback along the entire section of the top cam shelves.
3. **Cut Crown to Length:** Using a miter saw, cut to length.
4. **Drill Pilot Holes:** Drill pilot holes through molding.
5. **Secure Molding to Top Cam Shelves:** Using the 1" screws provided, secure molding to top cam shelves every 12".

NOTE: Installation of Crown Molding requires trim carpentry skills and additional tools, such as a miter saw.

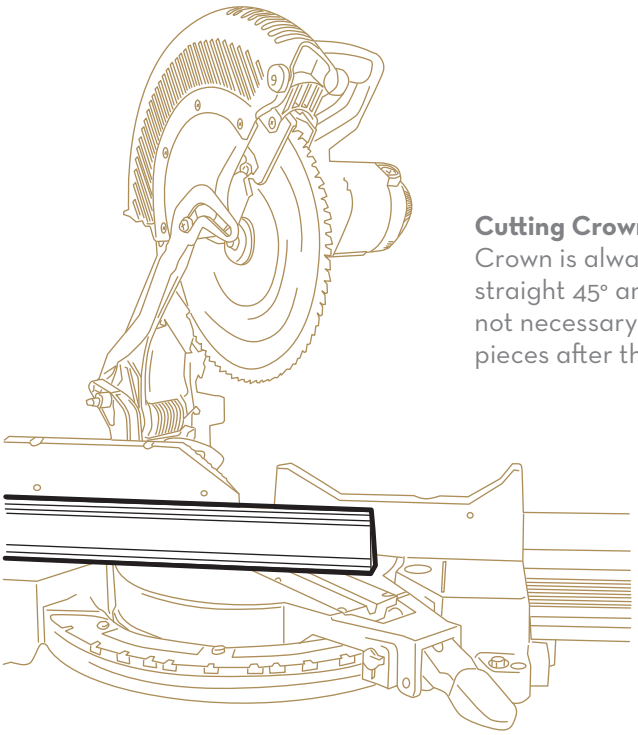

Cutting Crown Molding: Crown is always cut at a straight 45° angle. It is not necessary to cope pieces after they are cut.

Pilot Hole: Drill pilot hole through molding here and midway through top cam shelf.

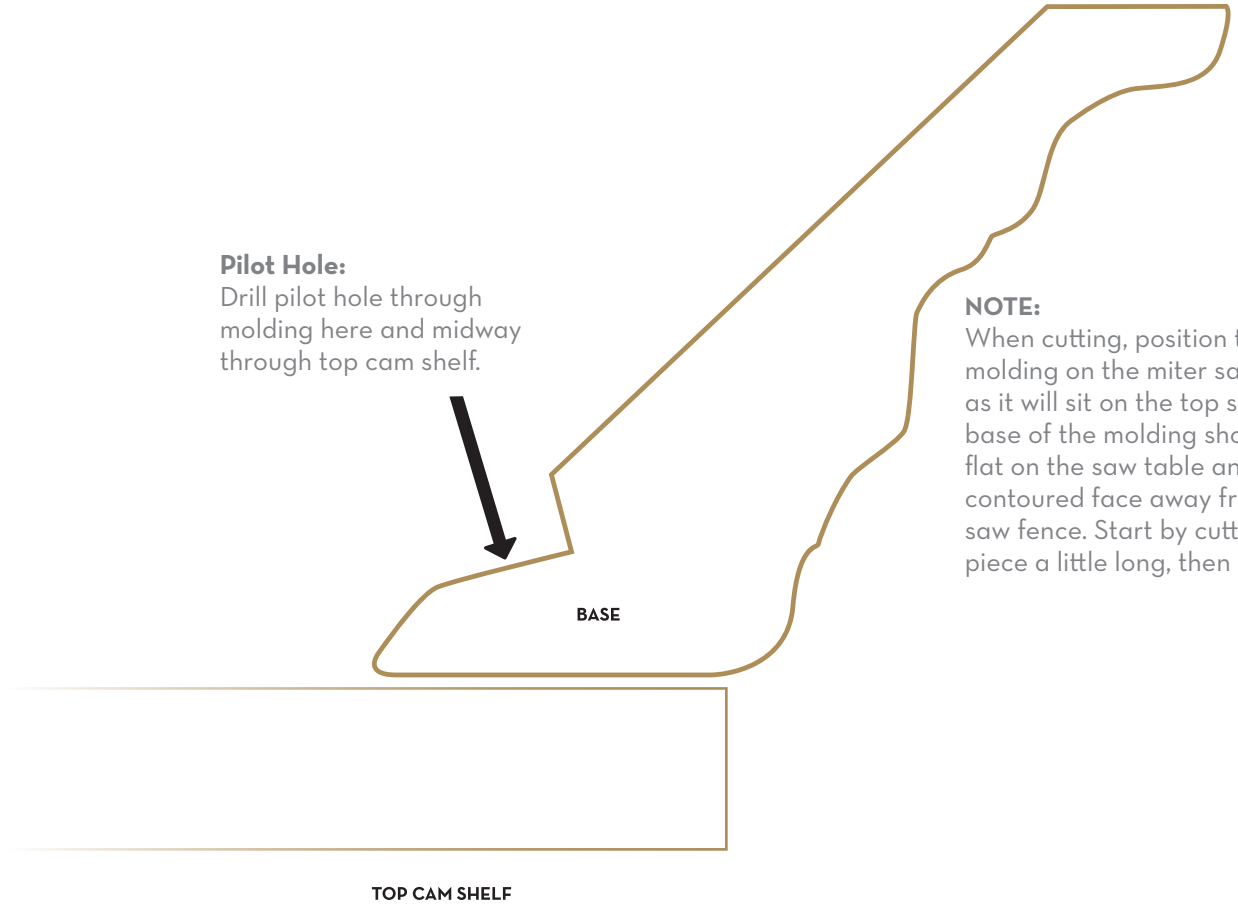

NOTE: When cutting, position the crown molding on the miter saw just as it will sit on the top shelf. The base of the molding should be flat on the saw table and the contoured face away from the saw fence. Start by cutting the piece a little long, then trim to fit.

PANTRY ITEMS

PULL-OUT WINE RACKS

Pull-out wine racks are installed in a manner similar to pull-out wire baskets. Attach glides to vertical panels with Euro screws and hang racks on glide hooks at a height to suit your needs.

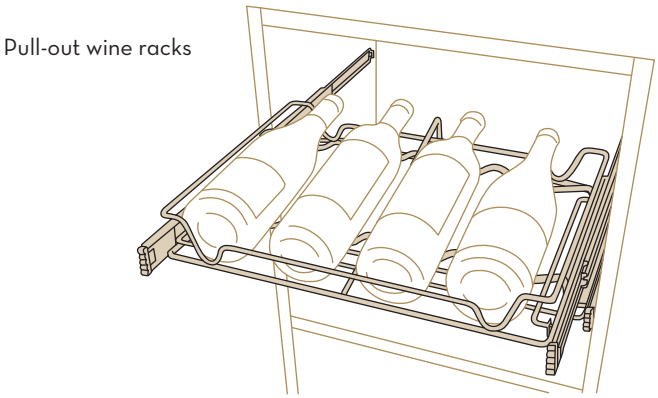

FIXED WINE RACKS:

Fixed wine racks are paired with a pre-drilled cam shelf and held in place with 25x5 mm pins.

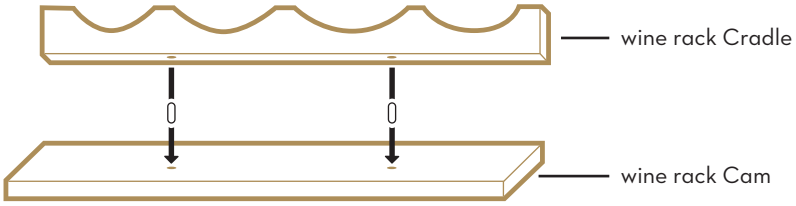

TO INSTALL STEMWARE RACKS:

Use 1-1/4" screws to install racks in bottom of cam shelf; then install the cam shelf into the unit.

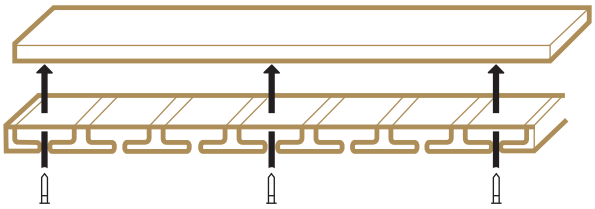

TO INSTALL TRAY DIVIDERS:

Tap 25x5 mm pins into pre-drilled holes inside both upper and lower cam shelves. Install cam shelves with 17 open holes in-between. Slide grooved 22-1/2" tray dividers over pins.

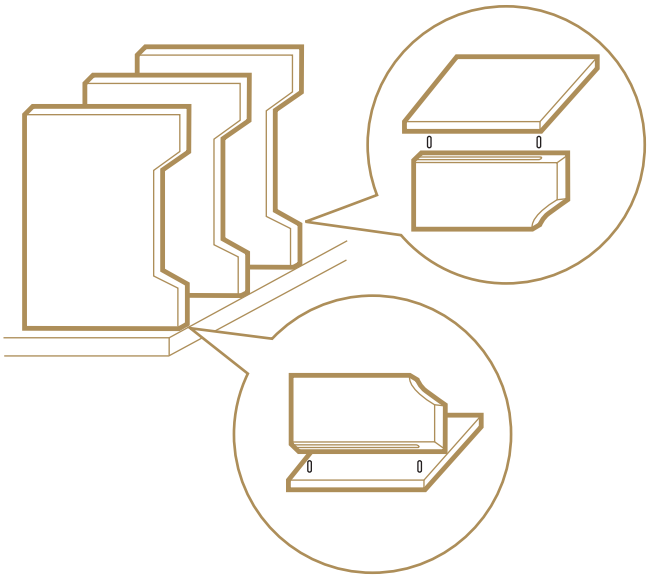

NON-STANDARD RAIL INSTALLATIONS

POCKET DOORS

IMPORTANT: Each pocket door situation may be different. Be sure to plan out your installation process and hardware to prevent any damage. Customer will supply additional hardware for proper installation.

The installation of the rail onto a pocket door frame can be tricky and requires some additional hardware based on your own situation.

1. Draw level line for rail.

2. Install rail, using care with proper (shorter) length fasteners to prevent damage to door. Use available studs and pocket door furring strips.

Our standard toggles and rail screws are included with the order. When these cannot be used due to the space contraints of a pocket door, you must find and create support for the rail and the system. You will need to use other types of drywall anchors and may be required to break off the points of an anchor to shorten its length. Use metal anchors for greater strength. Install anchor every 3" or as close as the manufacturer allows if no wood frame is found.

3. Install cam shelves according to your design, likely at the top and bottom of verticals.

4. Provide additional support: install cleat and/or L-brackets for top and bottom cam shelves. Use the header above the pocket door frame in addition to the horizontal furring strips of the door frame for attachment points. Use care with fastener lengths. Attach shelves to cleat or L-channels, drilling pilot holes as needed. Use extra L-brackets.

5. Install other cam shelves as per your design and provide similar solid attachment with cleats or L-brackets.

6. Attach verticals to pocket door furring strips: Locate the horizontal pocket door furring strips, attach the wider angle brackets to these furring strips and vertical for additional support. Use care with fastener lengths. Use a minimum of 4 brackets.

7. Continue installation as per your design.

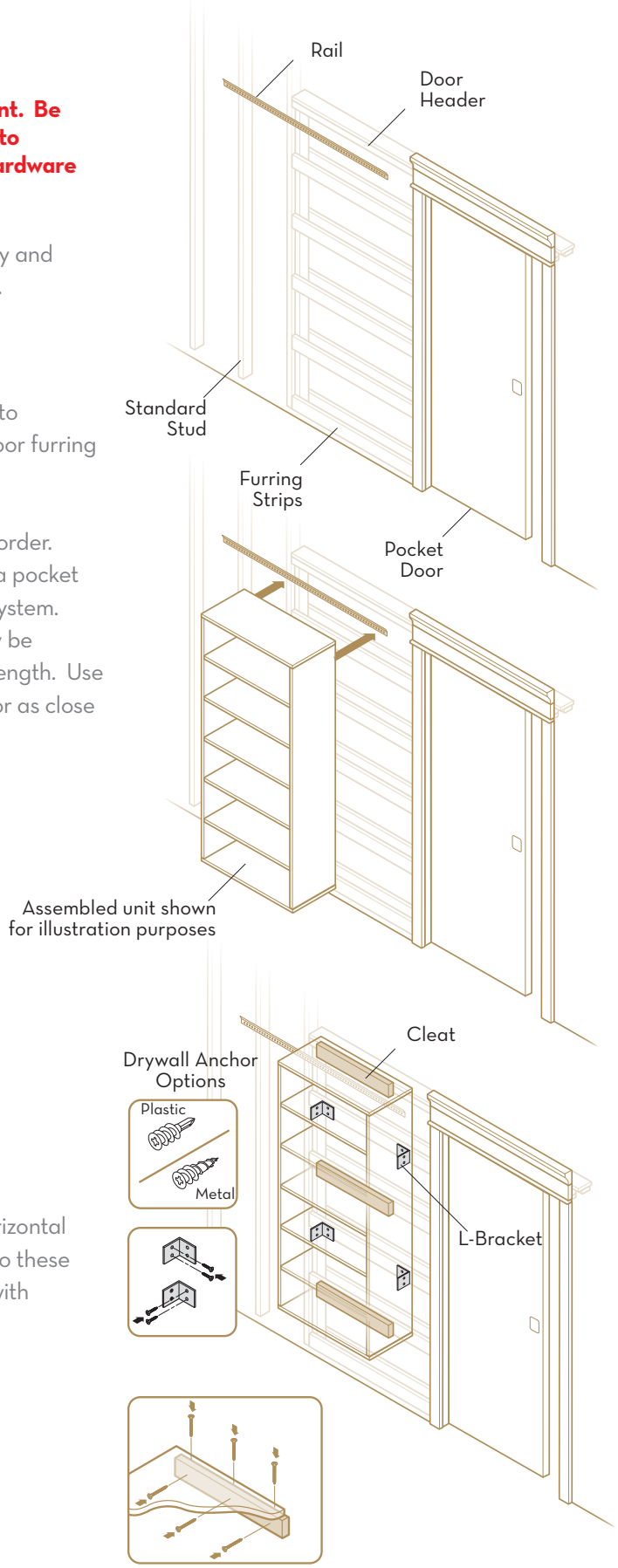

SLOPED CEILINGS

This installation requires rails installed at different heights. It may help to have an assistant or clamps to hold parts for this installation. It is critical that the holes on all verticals are consistently level throughout the wall installation. Otherwise, the shelving will not be level. It helps to remember that the top of the vertical panel is always 8-1/4" above the bottom edge of the rail. You can confirm this by holding a piece of rail in the vertical panel notch.

TO INSTALL UNDER A SLOPED CEILING: In a typical installation, we recommend the following steps:

1. **Install highest section:** Start with the highest section. Install the rail, verticals and cam shelves.
2. **Layout and install the next section:** Hold the vertical panel along with a shelf from the next section against the installed vertical panel, at the highest possible position accommodating the level shelf. With the vertical panels side-by-side, lower the free vertical panel until its holes are aligned with the installed vertical panel's holes. Mark the top of the free vertical panel, measure down 8-1/4" from this point and install the next rail at this level.
3. **Repeat for each stepped down section.**

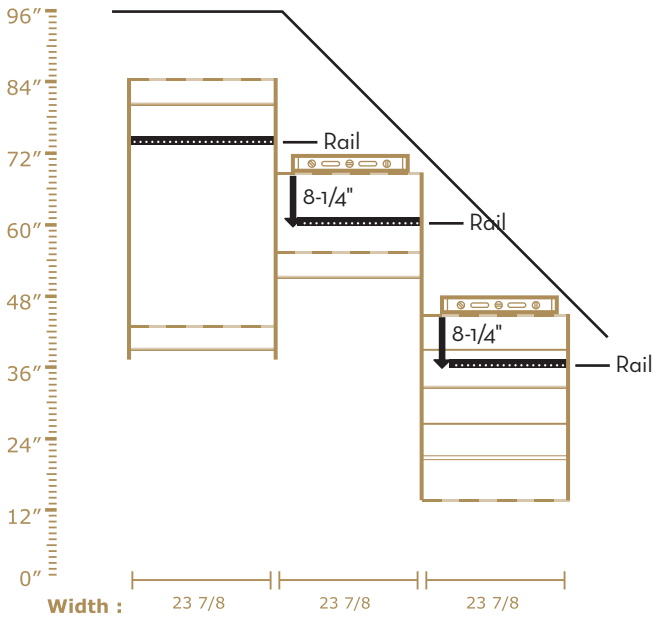

SURROUNDING WALL OBJECTS

Due to the custom nature of installing around wall objects, finished end panels are provided which require some on-site drilling. Surrounding wall objects may also require multiple rail heights.

1. **Drill holes through the finished side of the vertical:** If a shared vertical is noted as having a finished side, carefully determine where "thru-holes" are required (1a).

   Method A: Place finished side down on a scrap board and drill thru the appropriate 5 mm holes (1b). Some chip-out is possible.

   Method B: Place finished side up and carefully position a thru-drilled panel on top so the holes will be aligned, and use the thru-drilled panel as a template to drill 5 mm holes where required.

Shared Vertical Panel: Holes drilled on left side and finished (no holes) on right side.

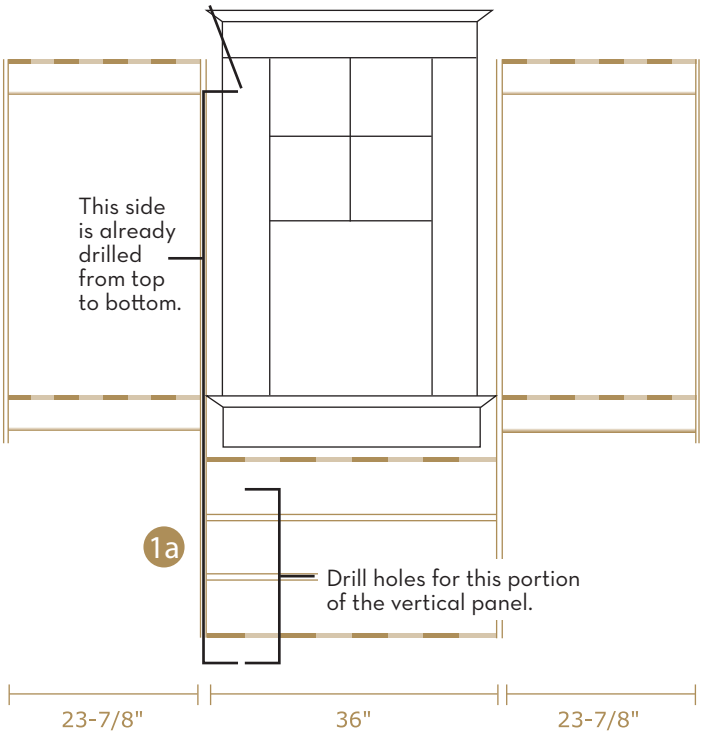

Method A

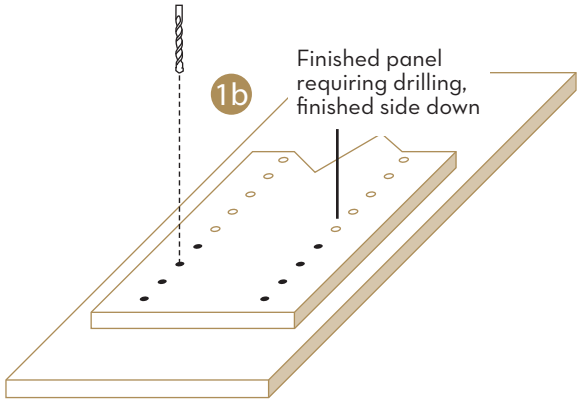

Method B

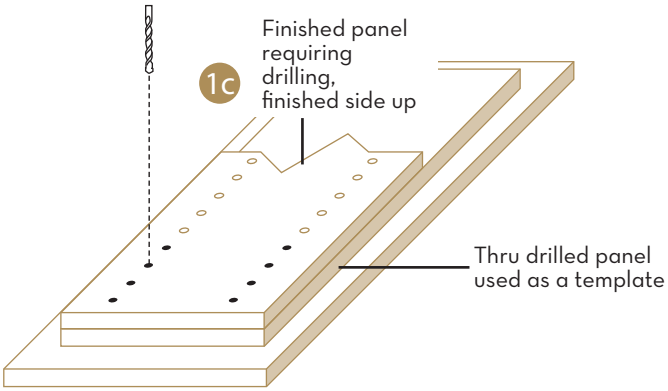

INSTALL A TWO-TIER, BENCH SYSTEM

A two-tier, floor-based, bench system is basically two stacked, floor-based sections – the lower section serving as the "floor" for the upper section. L-brackets anchor the lower section to the wall while cleats and L-bracket anchors the upper section.

1. **FIRST, INSTALL THE LOWER, BENCH SECTION,** including the bench top, following the instructions provided for floor-based sections without steel rail elsewhere in this booklet. This section is usually anchored to the wall with L-brackets.

IMPORTANT: Since the upper section is intended to rest on the lower section, take care to level and square the lower section before installing the upper section. Use a level, a carpenter's square and shims or other appropriate tools to do this.

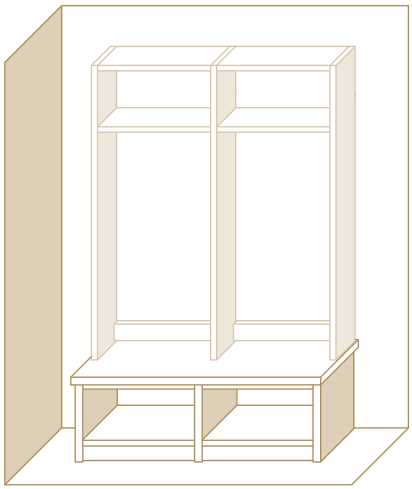

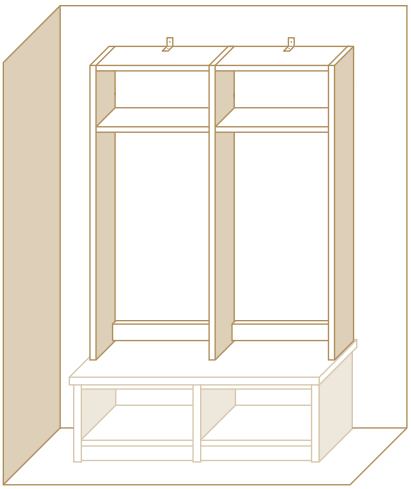

2. **NEXT, INSTALL THE UPPER SECTION**

3. Place a vertical panel for the upper section onto the lower section.

4. Connect vertical panels with cam shelves as described elsewhere in this booklet.

5. Level and square upper section.

6. Anchor with L-brackets.

7. Anchor the bottoms of the upper section vertical panels, using cleats as spacers or L-brackets, whichever is provided for your design.

TIP: A thin bead of caulking can also be used to hold the bottoms of the upper section vertical panels in place.

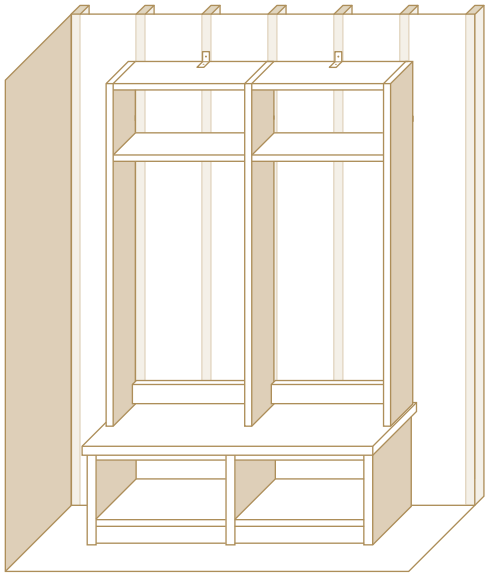

FINAL STEPS

RAIL COVER

NOTE: All rail cover is white. The cover is usually concealed by items stored on the shelves and hanging rods, and it is paintable.

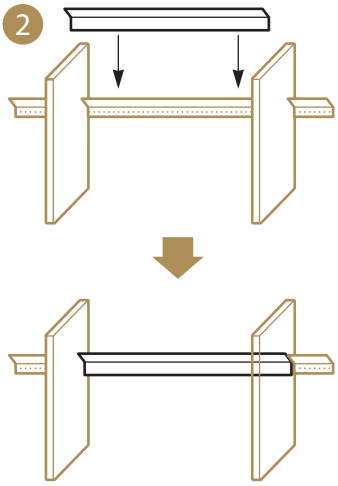

1. **CUT RAIL COVER TO LENGTH:** Using the interior measurements of each unit, cut the rail cover to length with a hacksaw.
2. **SLIP CUT SECTIONS INTO PLACE:** Slip these sections into place over the rail.

VERY IMPORTANT: Never hang vertical panels on top of the rail cover. This will cause the notches to crack.

RODS

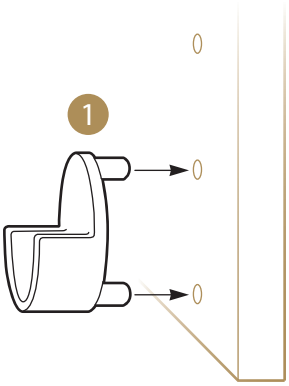

1. **INSTALL ROD END PAIRS:** Install rod end pairs per design. If the design includes a cam shelf above the hanging rod, leave one open hole between rod end and cam shelf.
2. **INSERT PRE-CUT RODS INTO ROD ENDS:** The fit should be snug, and no screws are required.

ACCESSORIES

BELT RACK OR TIE RACK

NOTE: BEST PLACEMENT OF RACKS IS EITHER WITHIN HANGING UNITS LOCATED DIRECTLY BELOW THE ROD, OR AGAINST AN OUTSIDE VERTICAL PANEL OF A UNIT.

1. Disconnect slide by moving leveler down as the arrow shown and pull apart front.
2. Install the inside member to the side panel with screws. Install on left or right.
3. Align slide member into either end and push back together.
4. Install the small black cover plate on end of rack. Repositioning: remove black cover plate, disconnect slide.

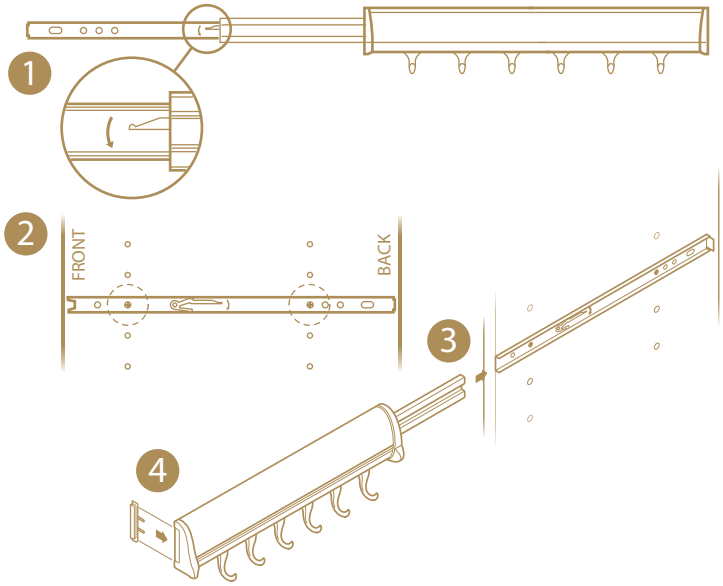

VALET POLE

NOTE: BEST PLACEMENT IS WITHIN OR AGAINST A SHELF UNIT AT A MINIMUM OF 65" FROM THE FLOOR.

1. Pull rod out from back.
2. Mount valet to panel. Install on left or right.
3. Push rod into front.

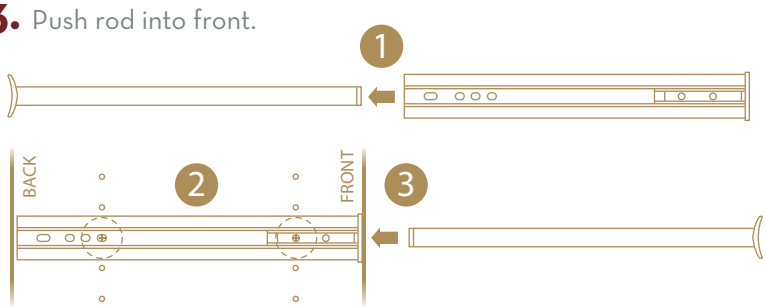

REPOSITIONING VALET

1. Press tab to release rod.
2. Slide rod out.

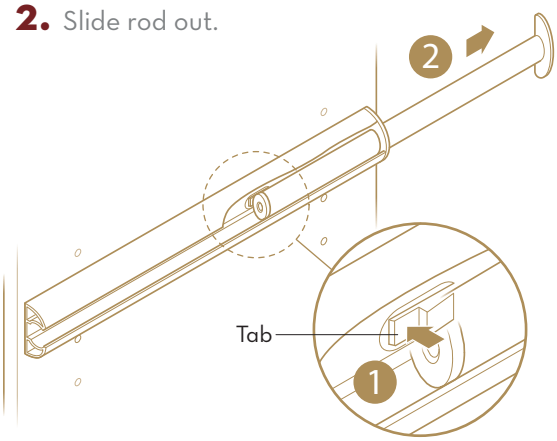

PANT RACK

1. Disconnect slide by moving leveler down as the arrow shown andpull apart.
2. Install the inside slide member into the panel system holes with Euro screws.
3. Align slide member into either end and push back together.
4. Insert the pant hangers onto the frame.

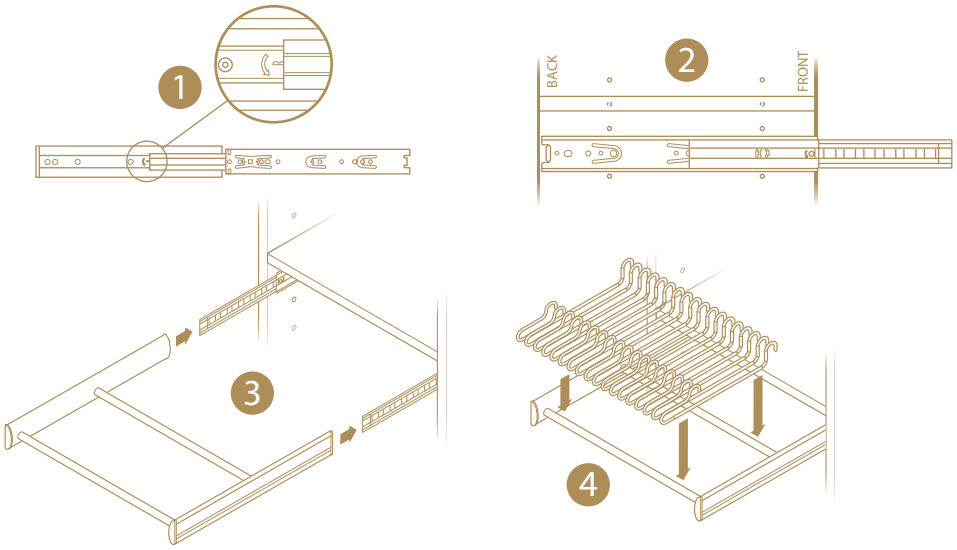

ADD L-BRACKETS TO STABILIZE SECTIONS

L-brackets are supplied to be installed below identified sections to prevent any side-to-side movement.

To install L-bracket, simply attach to bottom cam shelf with 5/8" screws and to wall stud with 2" screws. If no stud is available, use Toggles into sheetrock.

L-brackets may be installed either above or below bottom shelf.

L-brackets below or inside unit

CARE AND USE OF YOUR EASYCLOSETS ORGANIZATION SYSTEM

ONCE INSTALLED, HOW DO I CLEAN THE ORGANIZATION SYSTEMS?

Clean by wiping with a damp cloth. Citrus-based, spray adhesive cleaners also work well.

ARE YOUR ORGANIZATION SYSTEMS ADJUSTABLE?
CAN I MODIFY MY DESIGN DURING INSTALLATION OR DOWN THE ROAD IF I NEED TO?

Absolutely! Hanging, shoe units and shelving sections are adjustable up or down in 1.25 inch increments. Regular shelves sit on pins and are easily adjusted. The locking cam shelves and hanging rods are adjusted up or down easily with a screwdriver. Changing the width of sections in your organization system will require the purchase of new shelves.

ADDITIONAL PART

We are happy to sell you additional parts should you decide you want to modify an organization system purchased from our company, (i.e.: shelves, hanging rods, drawers, baskets or hardware). Just call **Customer Service at 800-218-2492,** during business hours. We can verify your previous order with your name, invoice number or email address and gladly assist you with your parts order!

FILE FRAME INSTALLATION

1. Find the 2 side rail parts.

2. Place the side rail on the top inside edge of the drawer box side.

3. Attach the side rails to the inside of the drawer box sides with included screws. Center on drawer box.

NOTE: If your system uses a lock on a 14" deep box, install side rails flush with back of drawer box to allow enough room for lock.

4. Install cross rails using the following steps (4a).

Place the cross rail on to the side rail half way between screw tab and hole; push down (4b).

Slowly slide the cross rail outward until it locks into the hole (4c). Confirm it is locked. The cross rail should not move (4d). Repeat 4a thru 4d for remaining cross rail.

5. One shorter cross rail is included in 30" kit for stability. Install with the same steps as the cross rail.

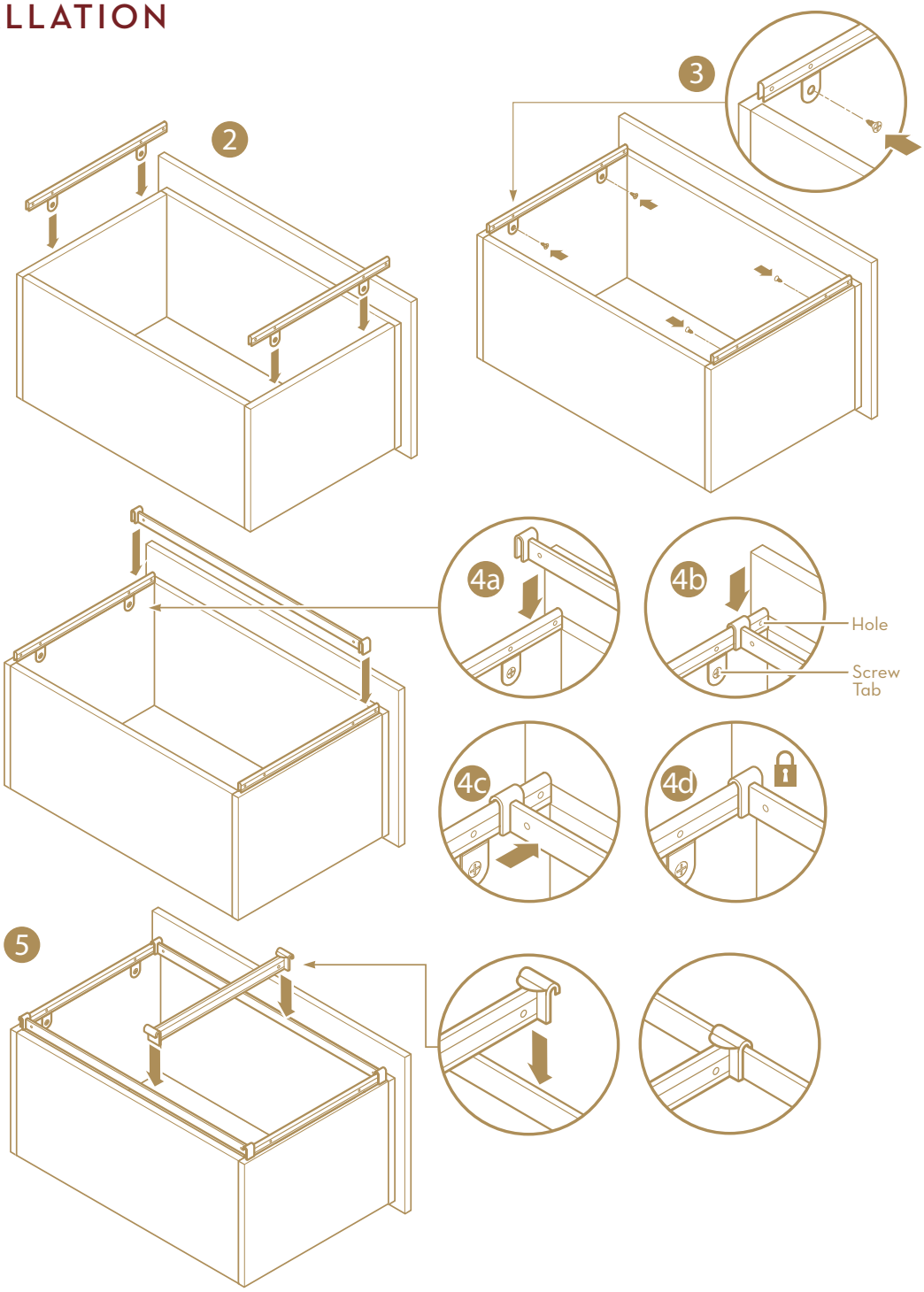

REMOVAL STEPS

R1. While squeezing the side rail close to where the cross rail is locked (R1), lift the cross rail straight up (R2).

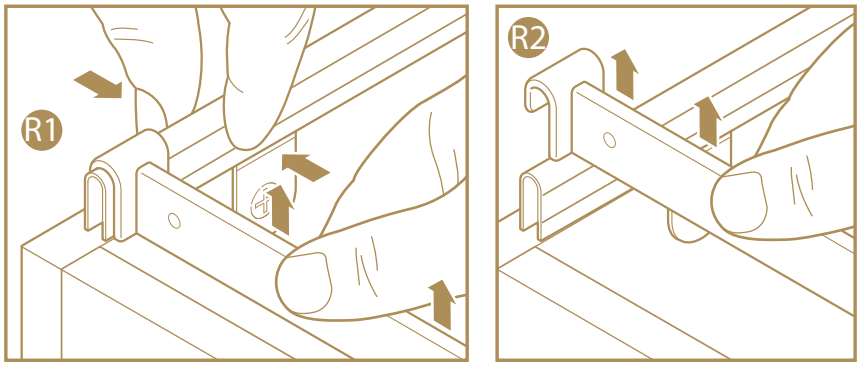

EASYCLOSETS®

HAVE ANY QUESTIONS?

Call **Customer Service** at 1-800-218-2492 Monday to Thursday: 8-7 PM E.S.T.
Friday: 8-6 PM E.S.T.
Saturday: 9-5 PM E.S.T.
Se habla Español

Watch helpful videos at **EasyClosets.com/Installation**

IDEAS? COMMENTS?

Email to: CustomerService@EasyClosets.com

EasyClosets
3311 Windquest Dr
Holland, MI 49424

EasyClosets.com